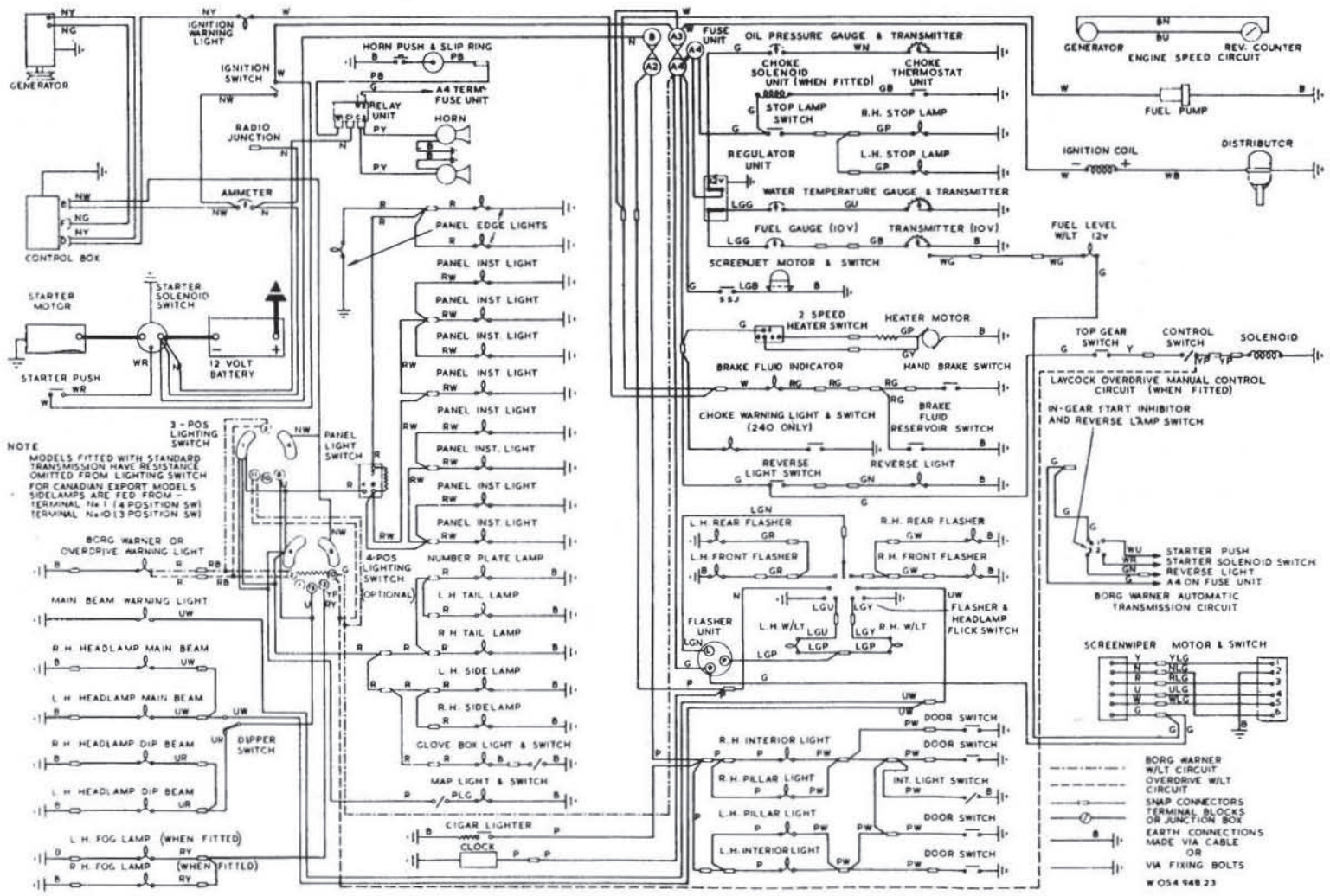

Fig.10.53. Wiring diagram for the 240 and 340 models