Rear Bumper Cover 76.22.77

Removal

All Vehicles

1. Raise and support the vehicle. **<<100-02>>**

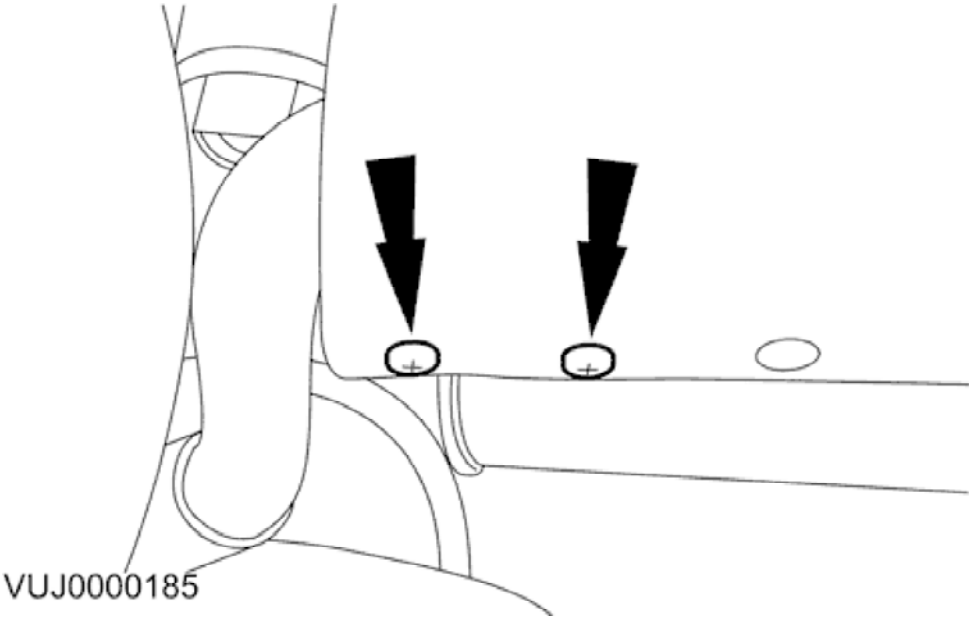

2. **NOTE:**
   Left-hand shown, right-hand similar.

Remove the rear bumper cover lower retaining screws.

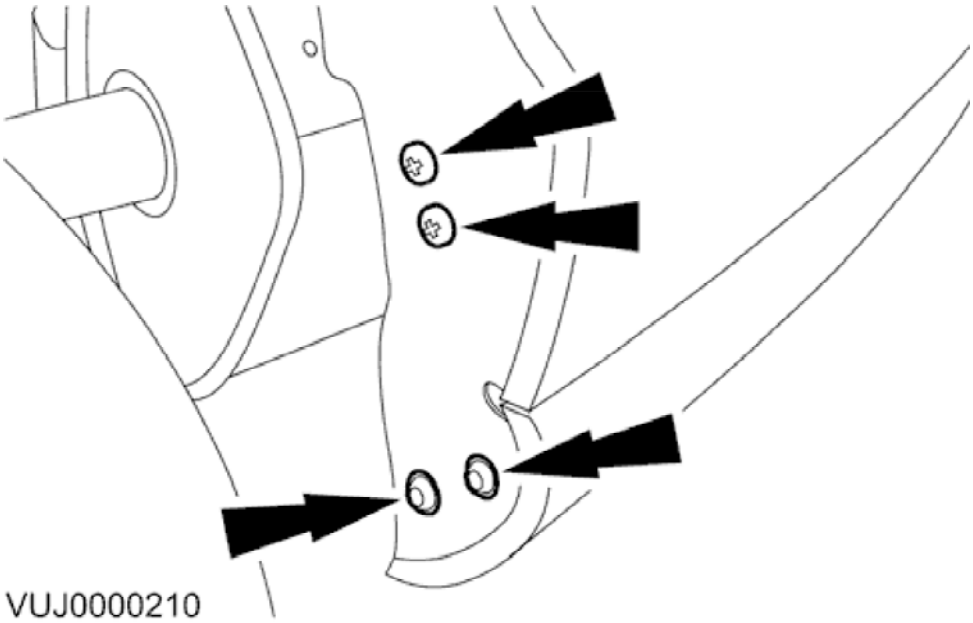

3. **NOTE:**
   Left-hand shown, right-hand similar.

Remove the rear fender splash shield retaining screws.

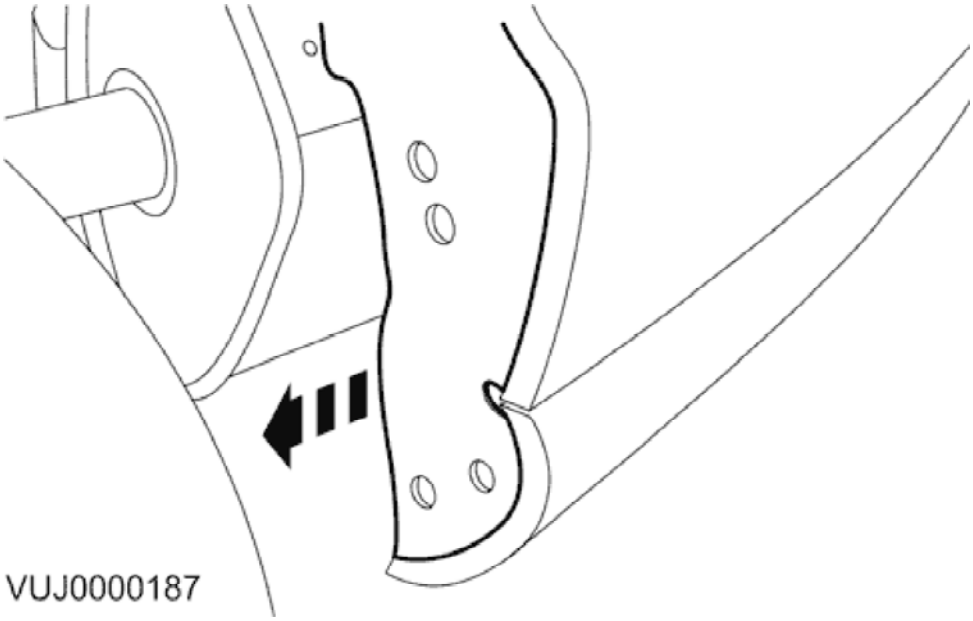

4. **NOTE:**
   Left-hand shown, right-hand similar.

Detach the rear fender splash shield.

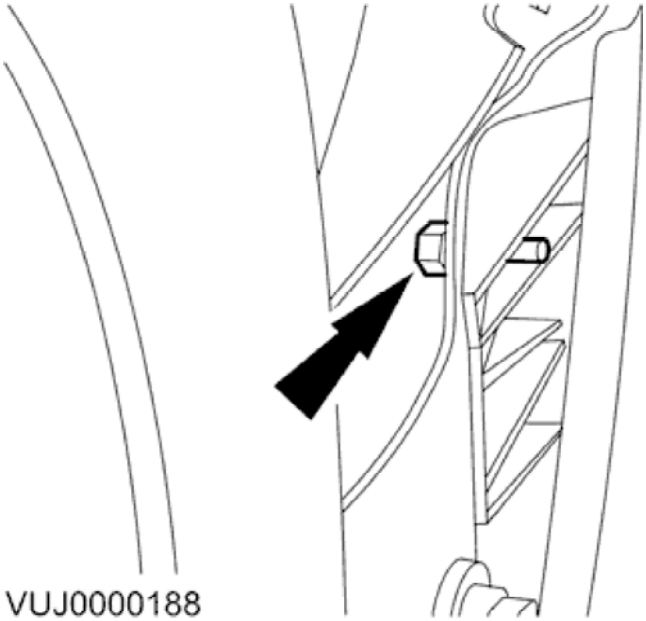

5. **NOTE:**
   Left-hand shown, right-hand similar.

   Remove the rear bumper cover retaining bolt.

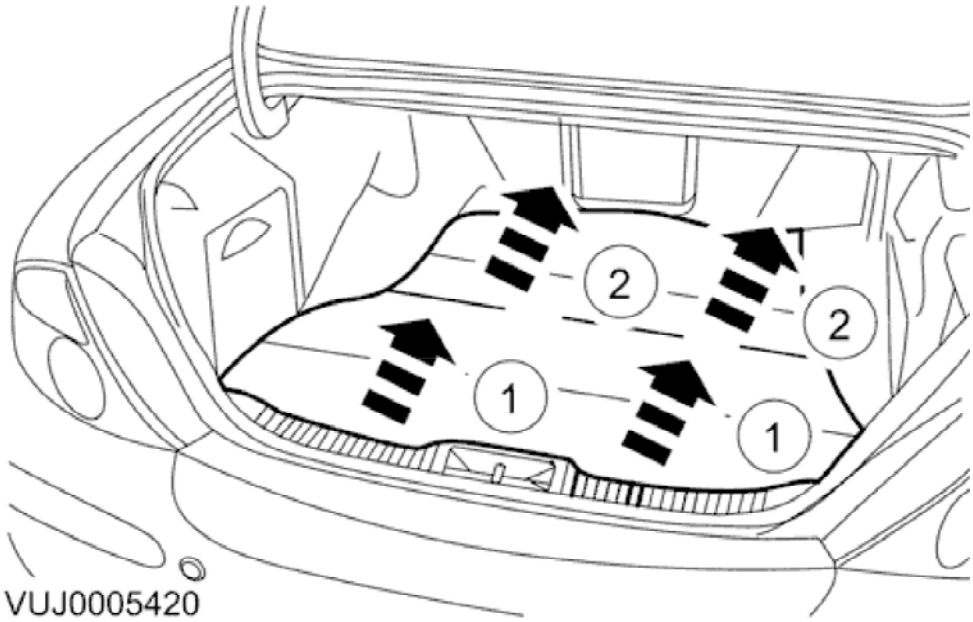

6. Reposition the luggage compartment floor covering.
   1. Detach the luggage compartment floor covering.
   2. Reposition the luggage compartment floor covering.

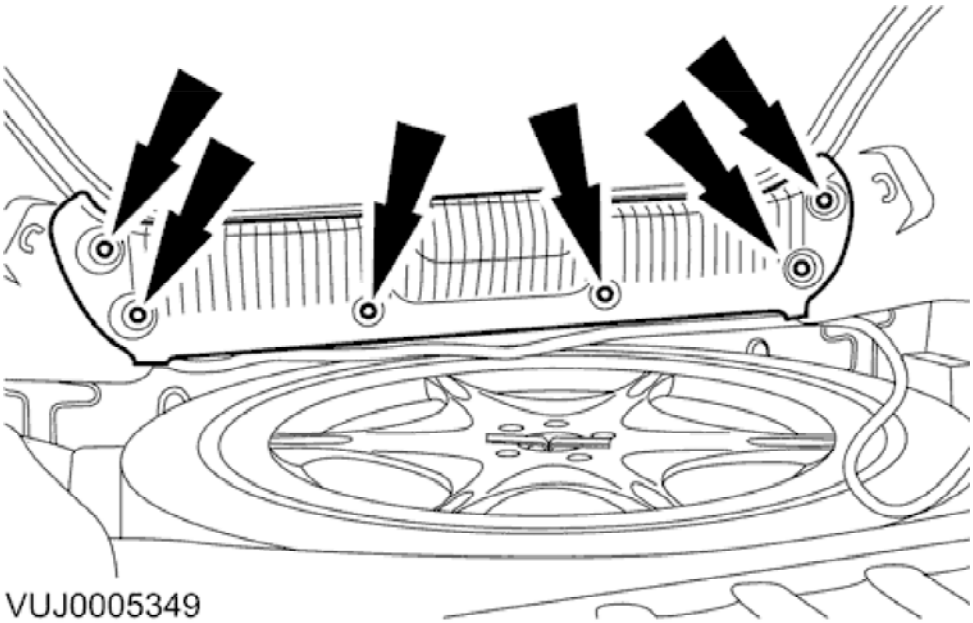
VUJ0005349

7. Remove the luggage compartment trim panel.

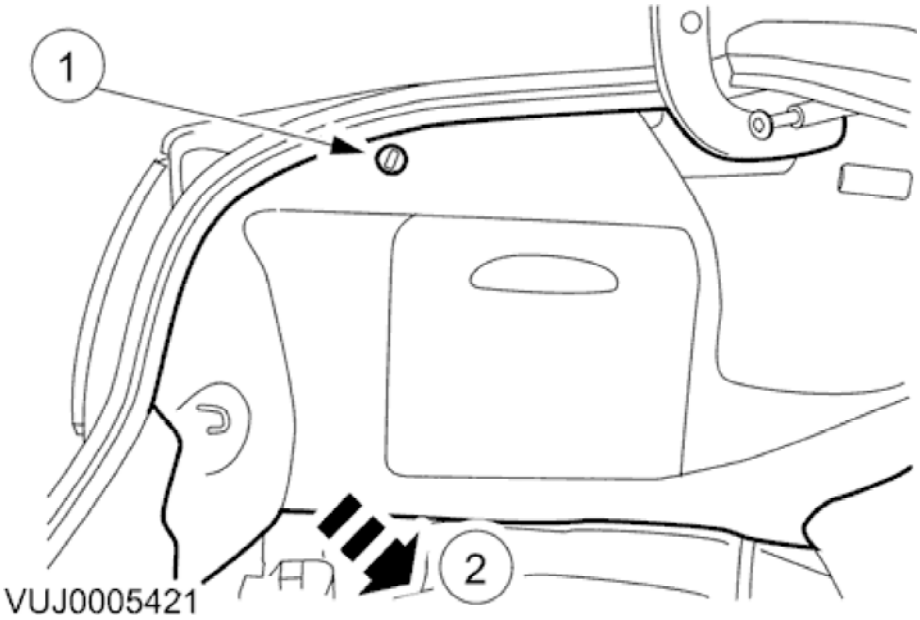

VUJ0005421

8. **NOTE:**
   Left-hand shown, right-hand similar.

Detach the luggage compartment side trim panel.
1. Remove the luggage compartment side trim panel retaining clip.
2. Detach the luggage compartment side trim panel.

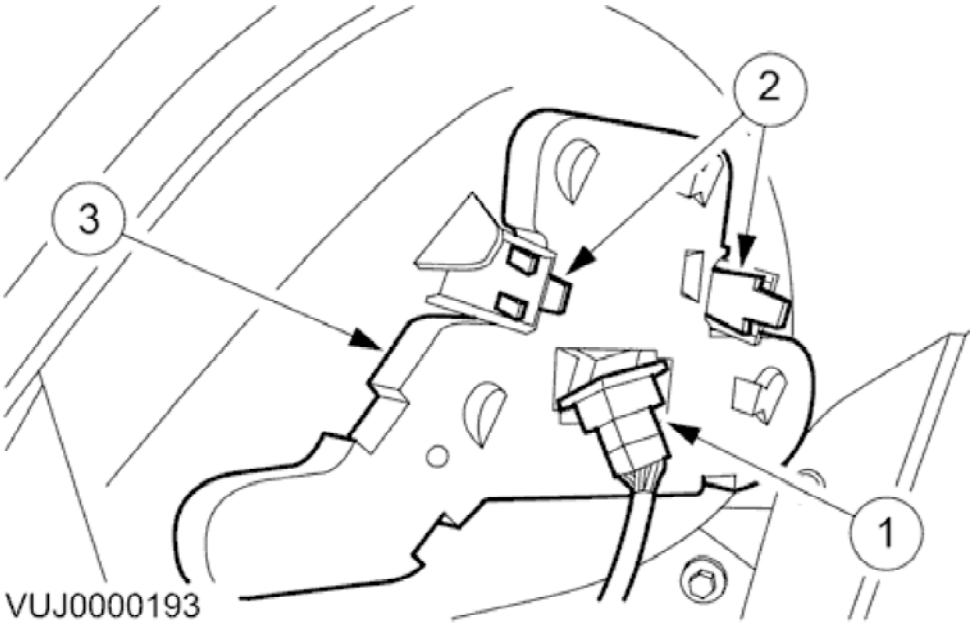

9. Remove the rear bulb holder assembly.
    1. Disconnect the electrical connector.
    2. Release the retaining tangs.
    3. Remove the rear bulb holder assembly.

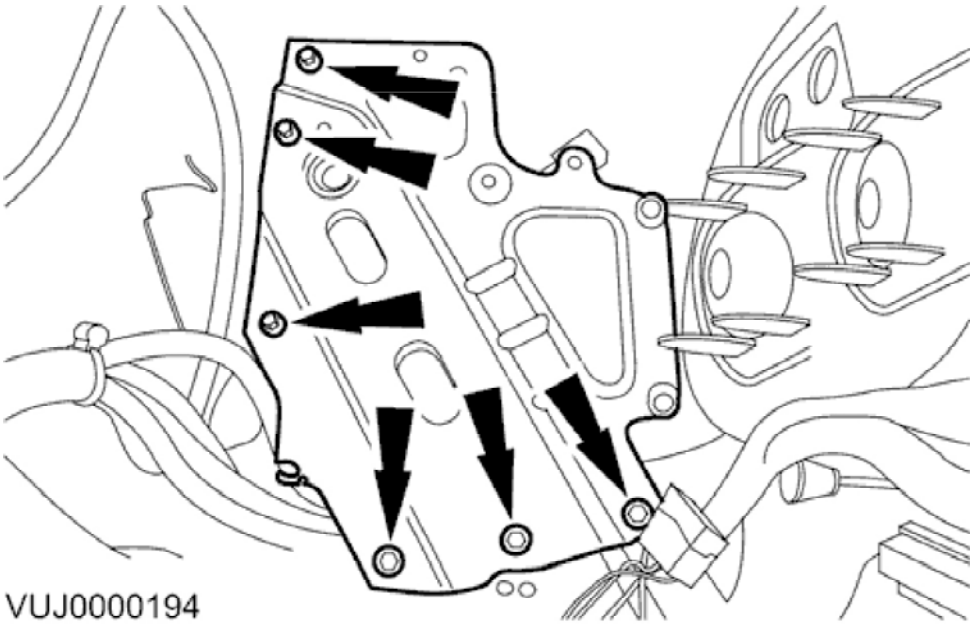

10. Detach the rear electronic module (REM) mounting bracket.

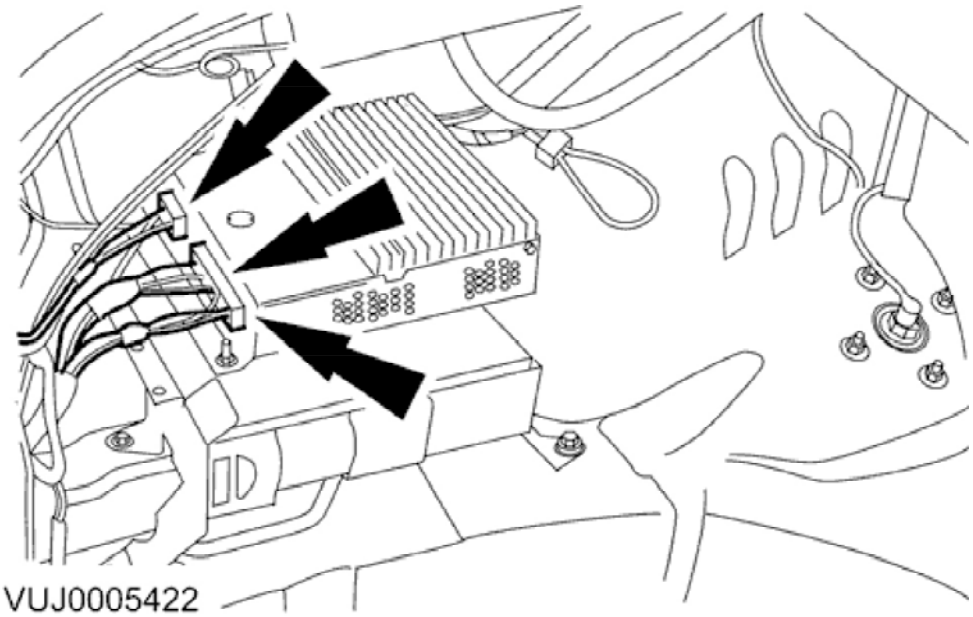

11. Disconnect the electrical connectors.

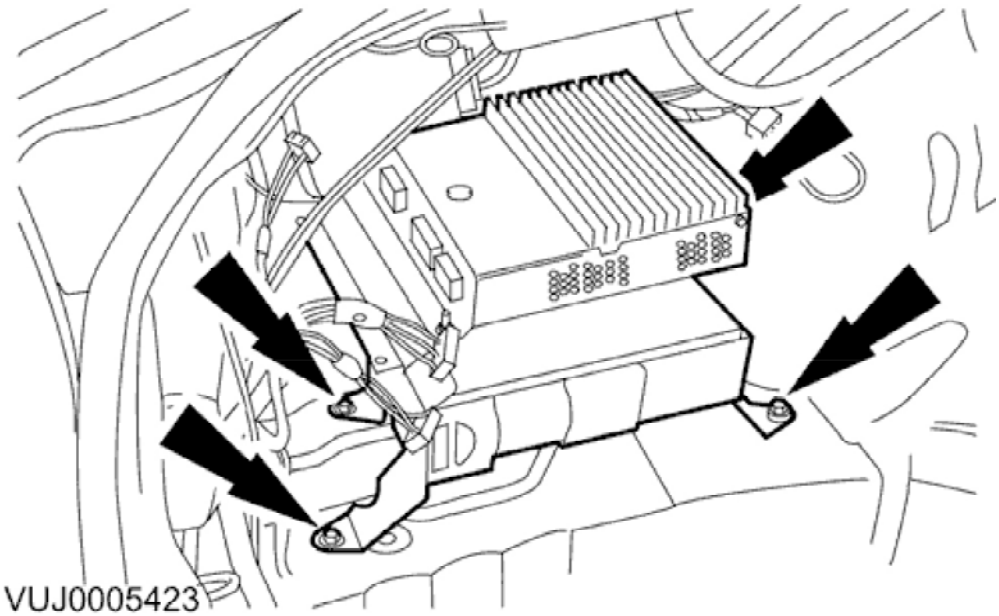

12. Detach the module mounting bracket.

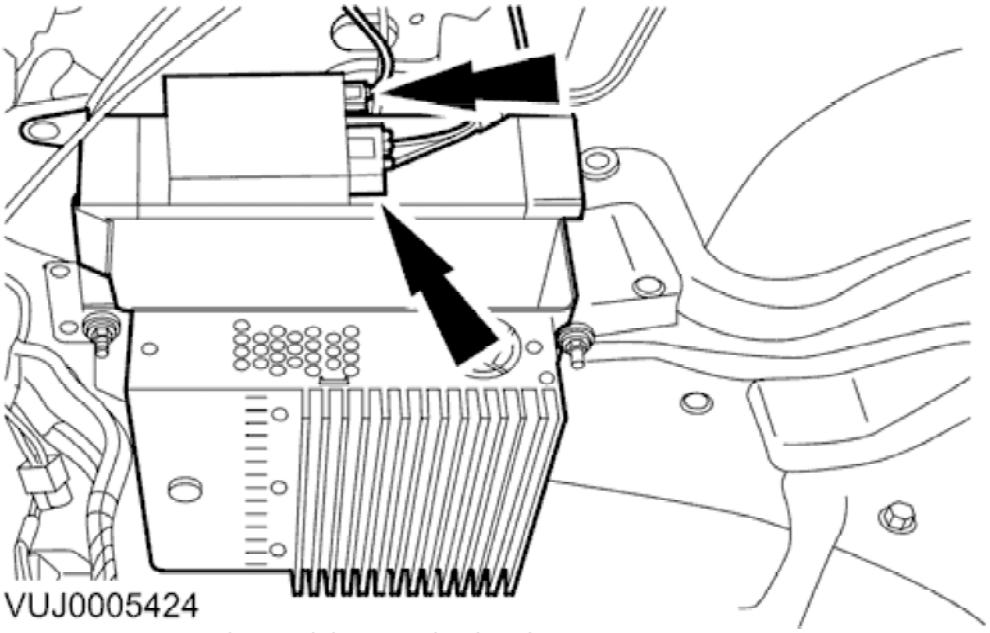
VUJ0005424

13. Remove the module mounting bracket.
    1. Disconnect the electrical connectors.

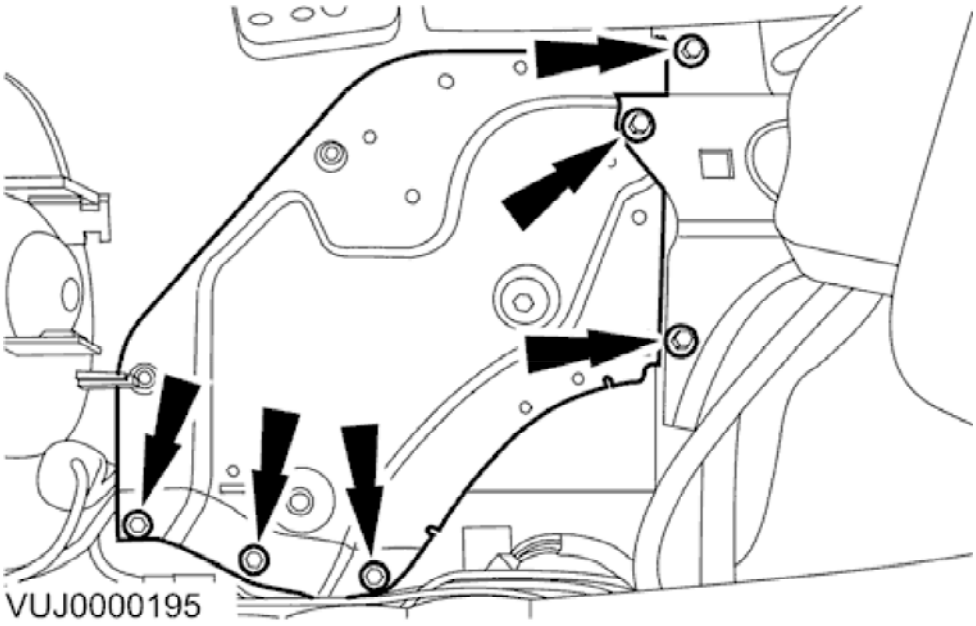
VUJ0000195

14. Detach the module mounting bracket.

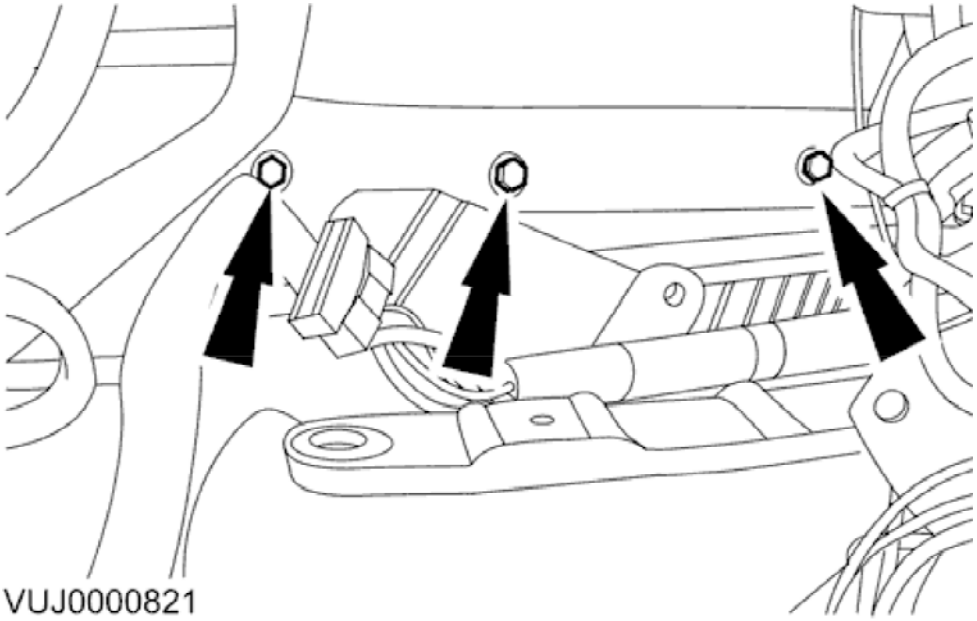

15. **NOTE:**
    Left-hand shown, right-hand similar.

Remove the rear bumper cover retaining bolts.

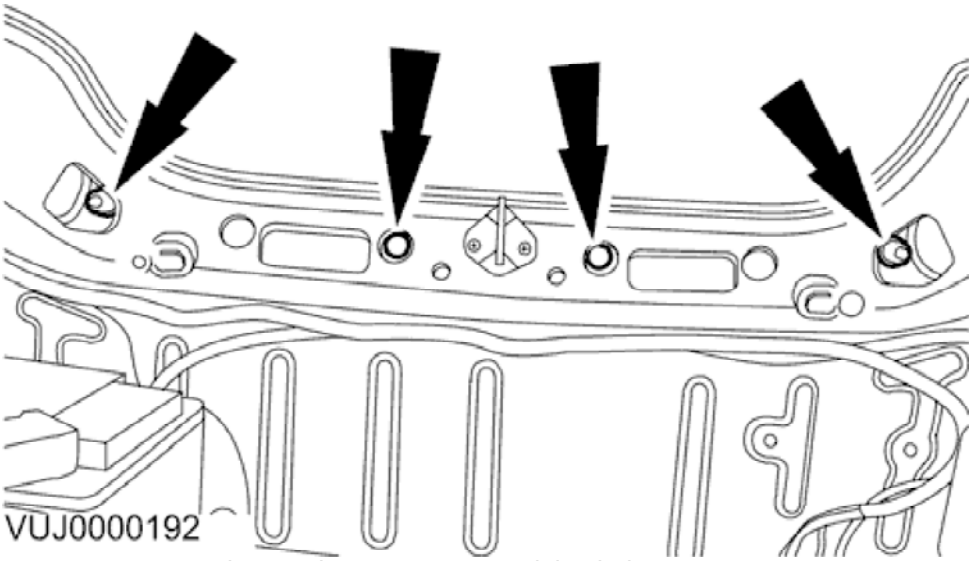

16. Remove the rear bumper cover retaining bolts.

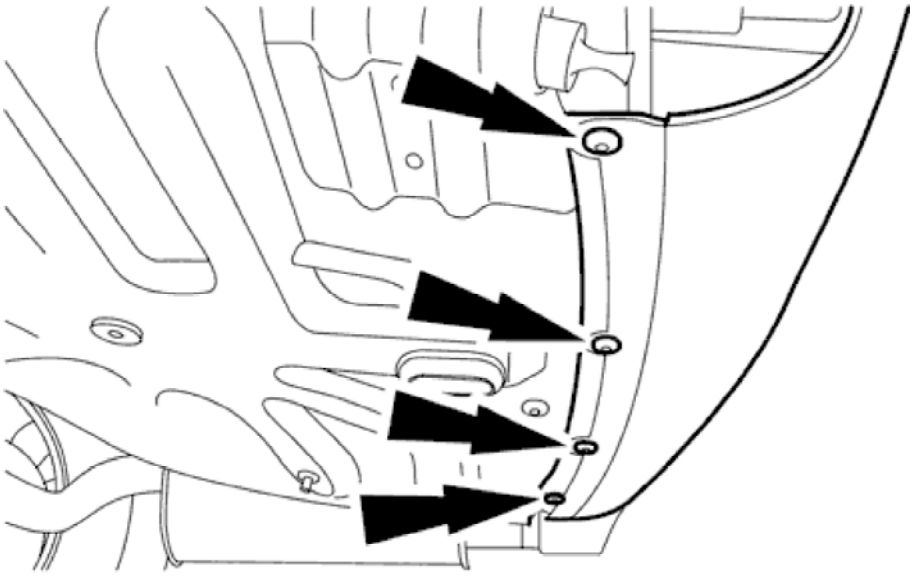

VUJ0000199

17. Detach the rear bumper cover.

Vehicles with parking aid

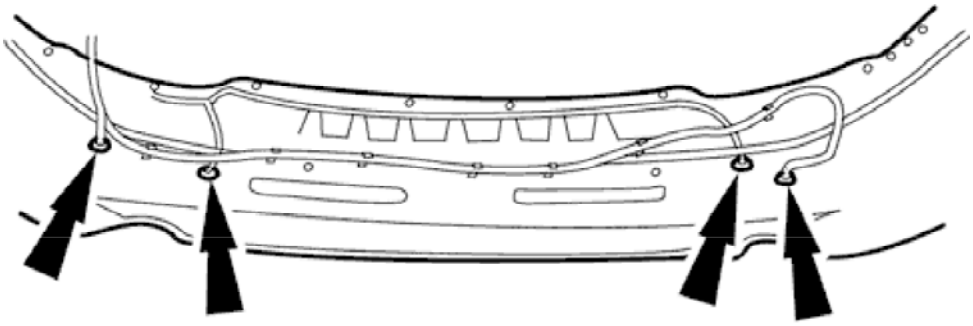

VUJ0000197

18. Disconnect the parking aid sensor electrical connectors.

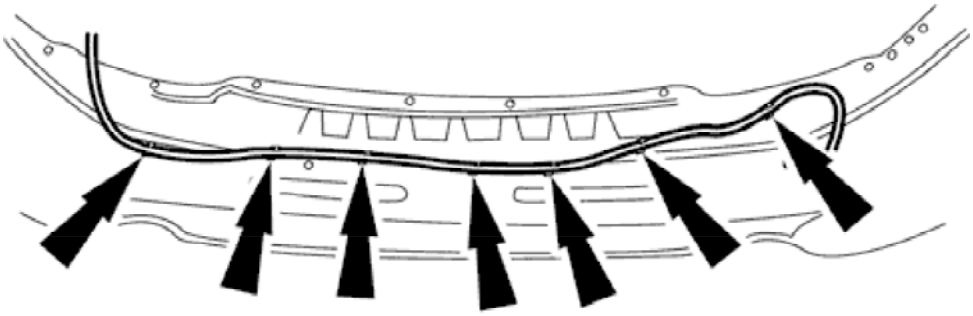

VUJ0000198

19. Detach the parking aid wiring harness from the rear bumper cover.

Installation

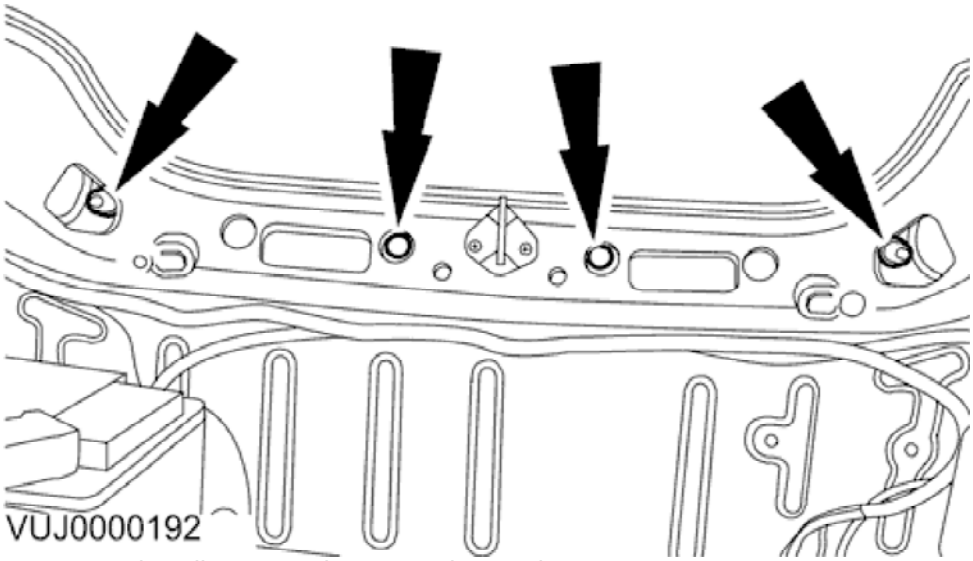

VUJ0000192

1. To install, reverse the removal procedure.
   - Tighten to 7 Nm.

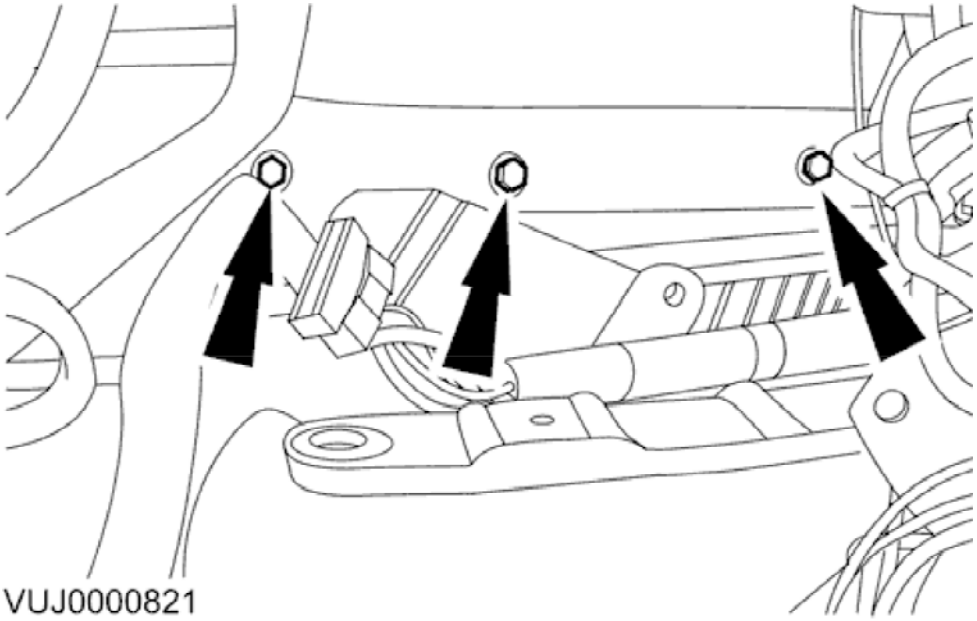

2. Tighten to 7 Nm.

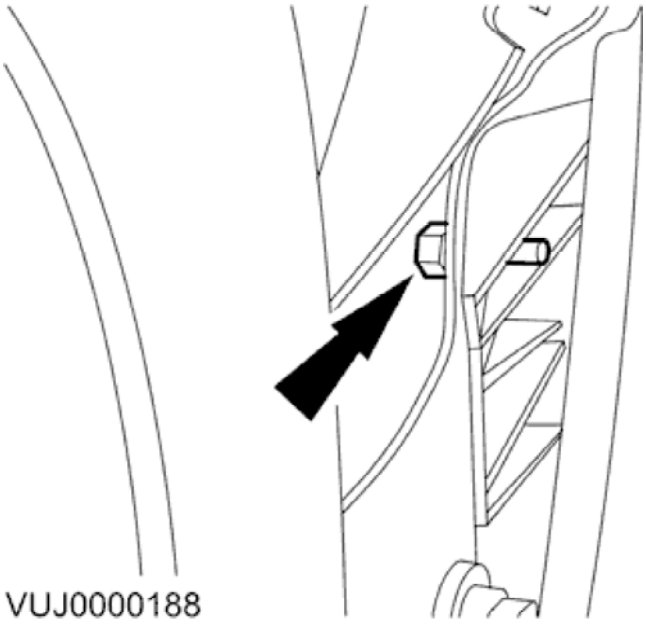

3. Tighten to 7 Nm.