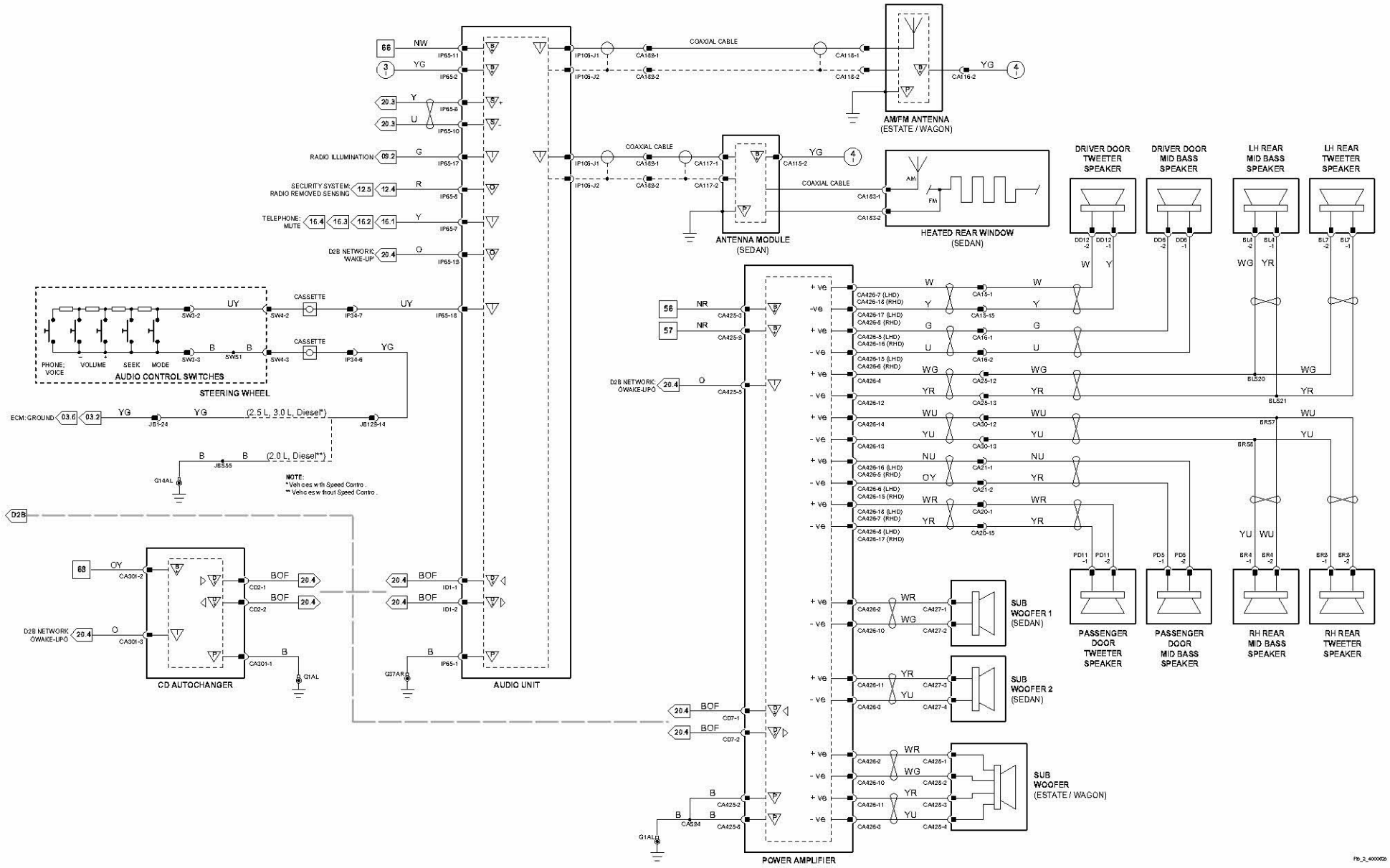


| | | | | | | | | | | | | | | | | | | | |
|---|---|---|---|---|---|---|---|---|---|---|---|---|---|---|---|---|---|---|---|
| 1 → 6 | Fig. 01.1 | 34 → 79 | Fig. 01.3 | 11 → 31 | Fig. 01.5 | 67 → 76 | Fig. 01.7 | 98 → 107 | Fig. 01.9 | Input | Battery Voltage | Sensor/Signal Supply V | CAN | D2B Network | VARIANT: | Premium ICE Vehicles |
| 7 → 33 | Fig. 01.2 | 1 → 10 | Fig. 01.4 | 32 → 66 | Fig. 01.6 | 77 → 97 | Fig. 01.8 | | | Output | Power Ground | Sensor/Signal Ground | SCP | Serial and Encoded Data | VIN RANGE: | All |
| | | | | | | | | | | | | | | | DATE OF ISSUE: | January 2007 |