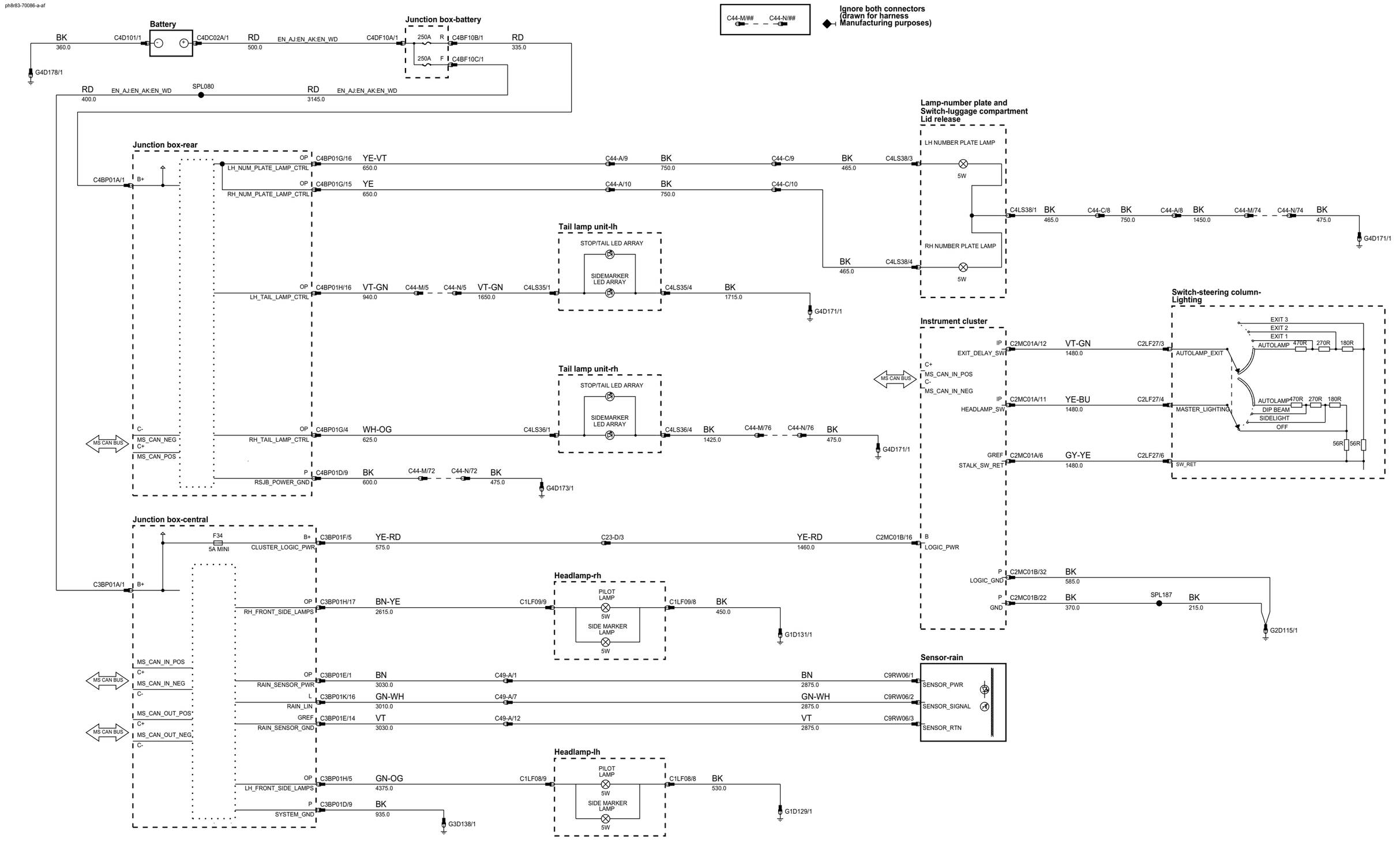
ph8r83-70086-a-af
C44-M/## C44-N/##
Ignore both connectors (drawn for harness Manufacturing purposes)
Battery
Junction box-battery
BK 360.0
C4D101/1
C4DC02A/1
RD 500.0
EN_AJ:EN_AK:EN_WD
C4DF10A/1
250A R
C4BF10B/1
RD 335.0
250A F
C4BF10C/1
G4D178/1
RD 400.0
EN_AJ:EN_AK:EN_WD
SPL080
RD 3145.0
EN_AJ:EN_AK:EN_WD
Lamp-number plate and Switch-luggage compartment Lid release
LH NUMBER PLATE LAMP
5W
RH NUMBER PLATE LAMP
5W
C4LS38/1 BK 465.0
C44-C/8 BK 750.0
C44-A/8 BK 1450.0
C44-M/74 C44-N/74 BK 475.0
G4D171/1
Junction box-rear
C4BP01A/1 B+
OP C4BP01G/16 YE-VT 650.0 LH_NUM_PLATE_LAMP_CTRL
C44-A/9 BK 750.0
C44-C/9 BK 465.0
C4LS38/3
OP C4BP01G/15 YE 650.0 RH_NUM_PLATE_LAMP_CTRL
C44-A/10 BK 750.0
C44-C/10
BK 465.0
C4LS38/4
Tail lamp unit-lh
STOP/TAIL LED ARRAY
SIDEMARKER LED ARRAY
OP C4BP01H/16 VT-GN 940.0 LH_TAIL_LAMP_CTRL
C44-M/5 C44-N/5 VT-GN 1650.0
C4LS35/1
C4LS35/4 BK 1715.0
G4D171/1
Switch-steering column-Lighting
EXIT 3
EXIT 2
EXIT 1
AUTOLAMP
470R 270R 180R
Instrument cluster
IP C2MC01A/12 VT-GN 1480.0 EXIT_DELAY_SW
C2LF27/3 AUTOLAMP_EXIT
C+ MS_CAN_IN_POS C- MS_CAN_IN_NEG
MS CAN BUS
Tail lamp unit-rh
STOP/TAIL LED ARRAY
SIDEMARKER LED ARRAY
IP C2MC01A/11 YE-BU 1480.0 HEADLAMP_SW
C2LF27/4 MASTER_LIGHTING
AUTOLAMP DIP BEAM SIDELIGHT OFF
470R 270R 180R
OP C4BP01G/4 WH-OG 625.0 RH_TAIL_LAMP_CTRL
C4LS36/1
C4LS36/4 BK 1425.0
C44-M/76 C44-N/76 BK 475.0
G4D171/1
C- MS_CAN_NEG C+ MS_CAN_POS
MS CAN BUS
56R 56R
GREF C2MC01A/6 GY-YE 1480.0 STALK_SW_RET
C2LF27/6 SW_RET
P C4BP01D/9 BK 600.0 RSJB_POWER_GND
C44-M/72 C44-N/72 BK 475.0
G4D173/1
Junction box-central
F34 5A MINI
B+ C3BP01F/5 YE-RD 575.0 CLUSTER_LOGIC_PWR
C23-D/3 YE-RD 1460.0
C2MC01B/16 B LOGIC_PWR
C3BP01A/1 B+
Headlamp-rh
PILOT LAMP 5W
SIDE MARKER LAMP 5W
OP C3BP01H/17 BN-YE 2615.0 RH_FRONT_SIDE_LAMPS
C1LF09/9
C1LF09/8 BK 450.0
G1D131/1
P C2MC01B/32 BK 585.0 LOGIC_GND
P C2MC01B/22 BK 370.0 GND
SPL187 BK 215.0
G2D115/1
Sensor-rain
SENSOR_PWR
SENSOR_SIGNAL
SENSOR_RTN
MS_CAN_IN_POS C+ MS_CAN_IN_NEG C-
MS_CAN_OUT_POS C+ MS_CAN_OUT_NEG C-
MS CAN BUS
OP C3BP01E/1 BN 3030.0 RAIN_SENSOR_PWR
C49-A/1
BN 2875.0
C9RW06/1
L C3BP01K/16 GN-WH 3010.0 RAIN_LIN
C49-A/7
GN-WH 2875.0
C9RW06/2
GREF C3BP01E/14 VT 3030.0 RAIN_SENSOR_GND
C49-A/12
VT 2875.0
C9RW06/3
Headlamp-lh
PILOT LAMP 5W
SIDE MARKER LAMP 5W
OP C3BP01H/5 GN-OG 4375.0 LH_FRONT_SIDE_LAMPS
C1LF08/9
C1LF08/8 BK 530.0
G1D129/1
P C3BP01D/9 BK 935.0 SYSTEM_GND
G3D138/1