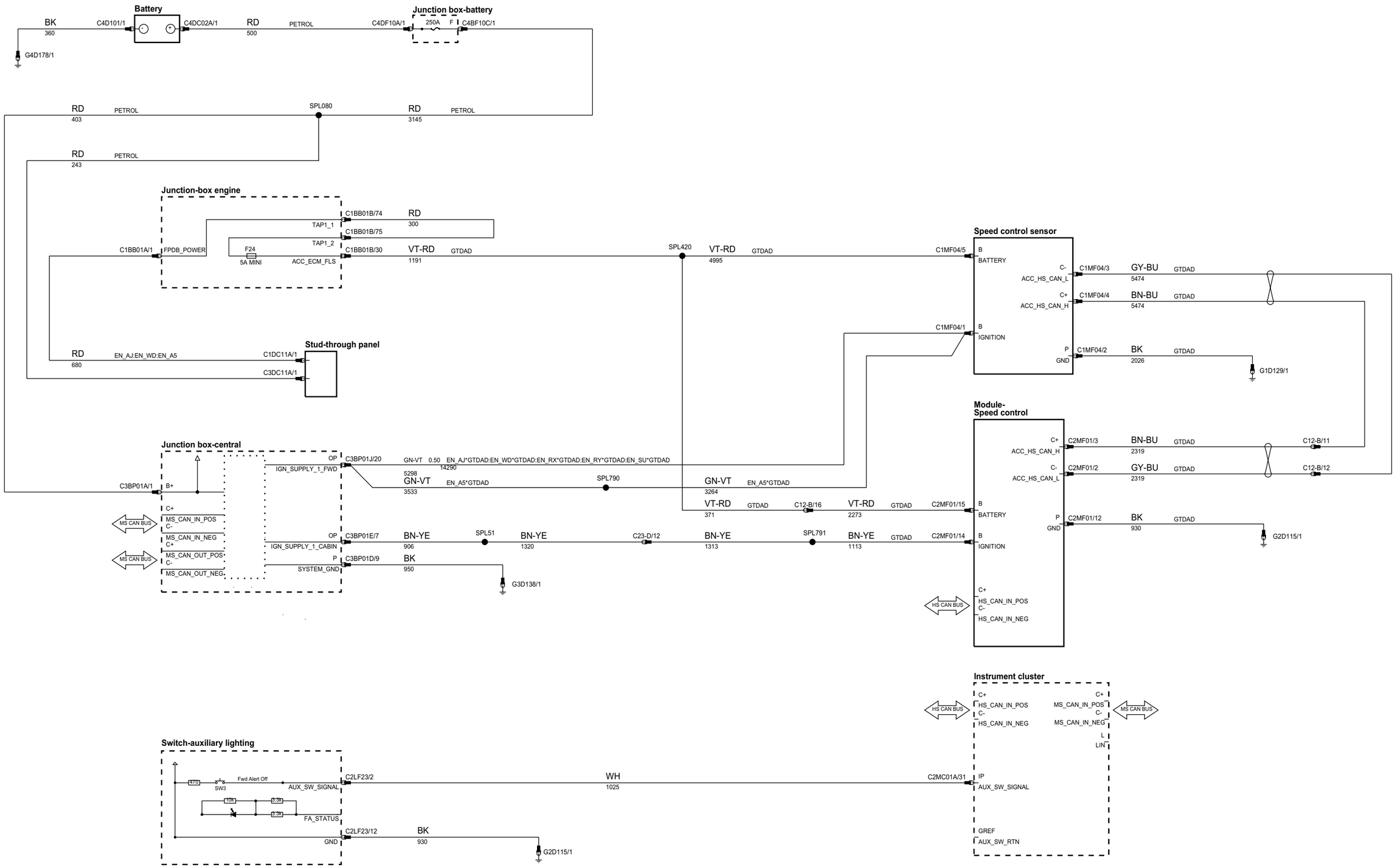phar83-70486-a-ae