phaw93-70295-e-a6

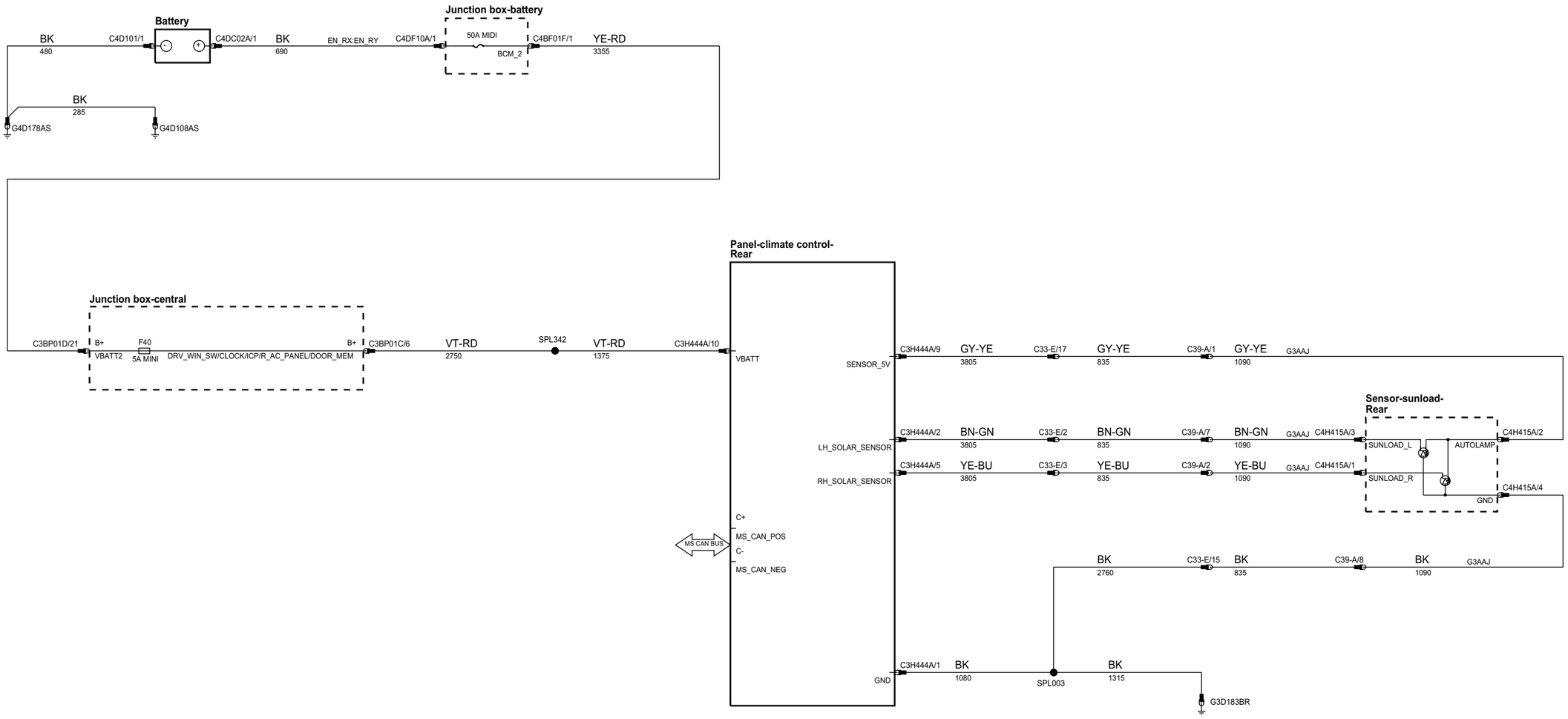

x