PUBLISHED: 11-MAY-2011
2010.0 X351, 501-12

INSTRUMENT PANEL AND CONSOLE

FLOOR CONSOLE SIDE TRIM PANEL (G1267527)

REMOVAL AND INSTALLATION

76.25.02	CONSOLE SIDE CASING - RENEW	ALL DERIVATIVES	0.30	USED WITHINS

REMOVAL

NOTE:

Removal steps in this procedure may contain installation details.

1.

CAUTIONS:

- Take extra care not to damage the edges of the component.
- Protect the surrounding trim from damage when changing the component.

2.

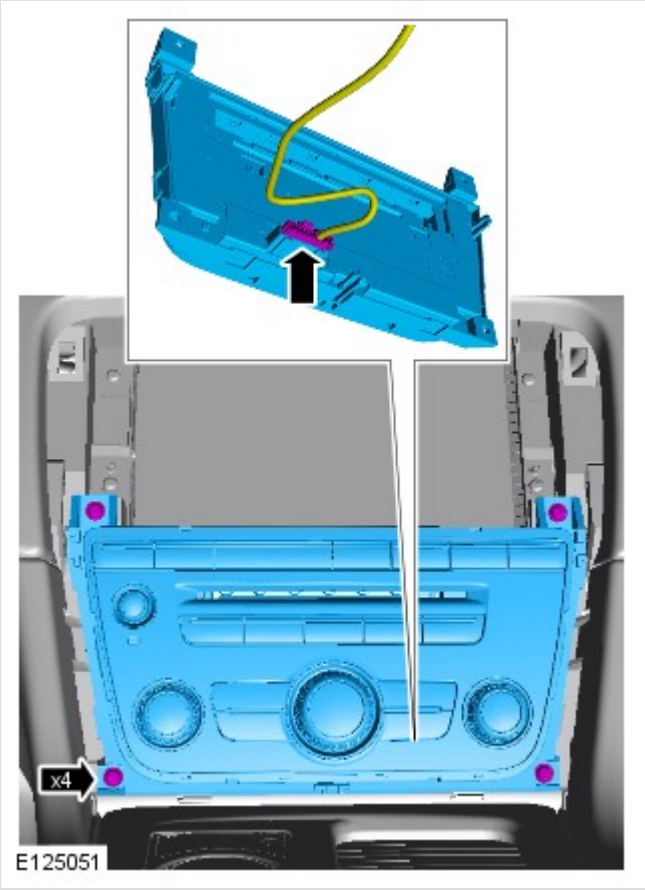

Torque: **2.5 Nm**

3.

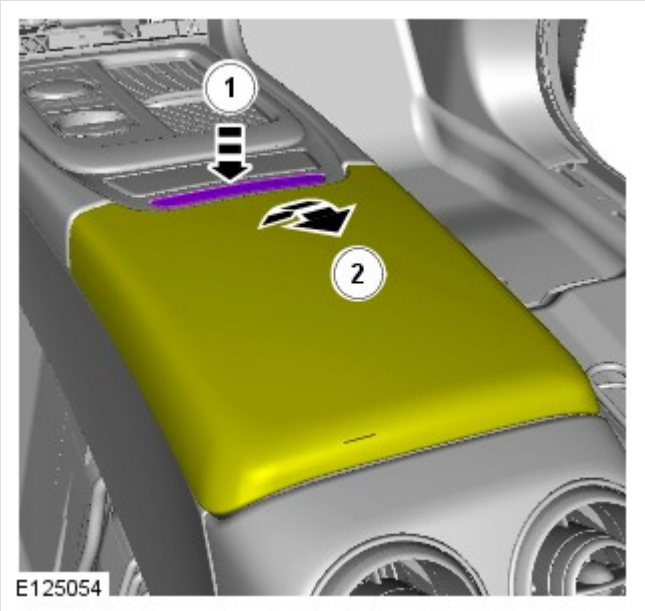

4.

CAUTION:

Take extra care not to damage the edges of the component.

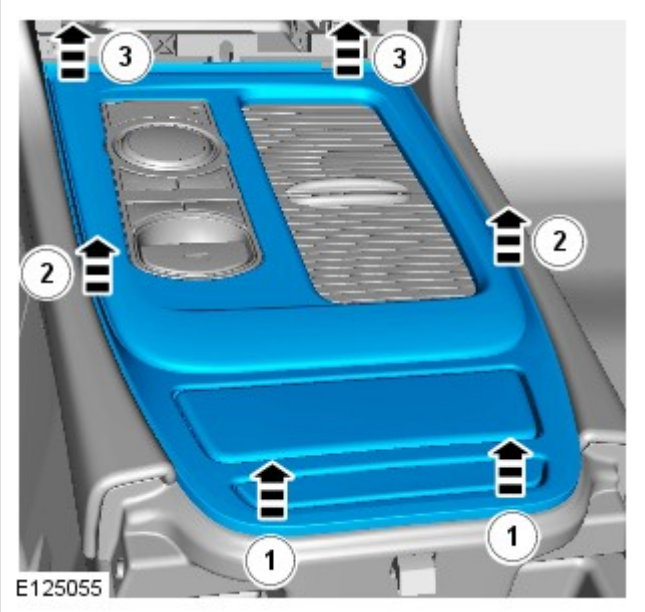

5.

NOTE:

RH illustration shown, LH is similar.

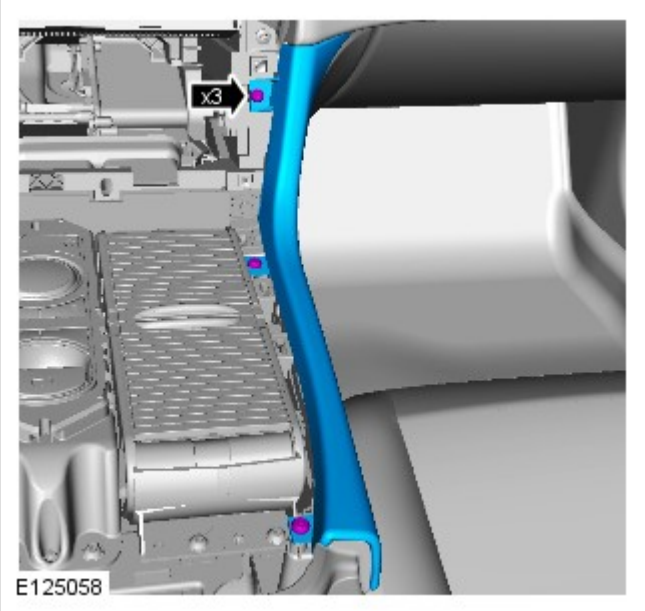

Torque: **2.5 Nm**

6.

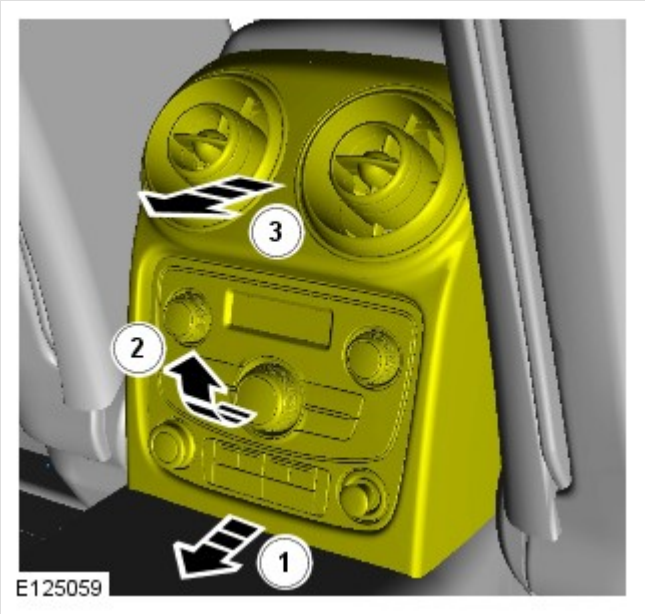

7.

NOTES:

- RH illustration shown, LH is similar.
- Make sure that the component is installed to the position noted on removal.

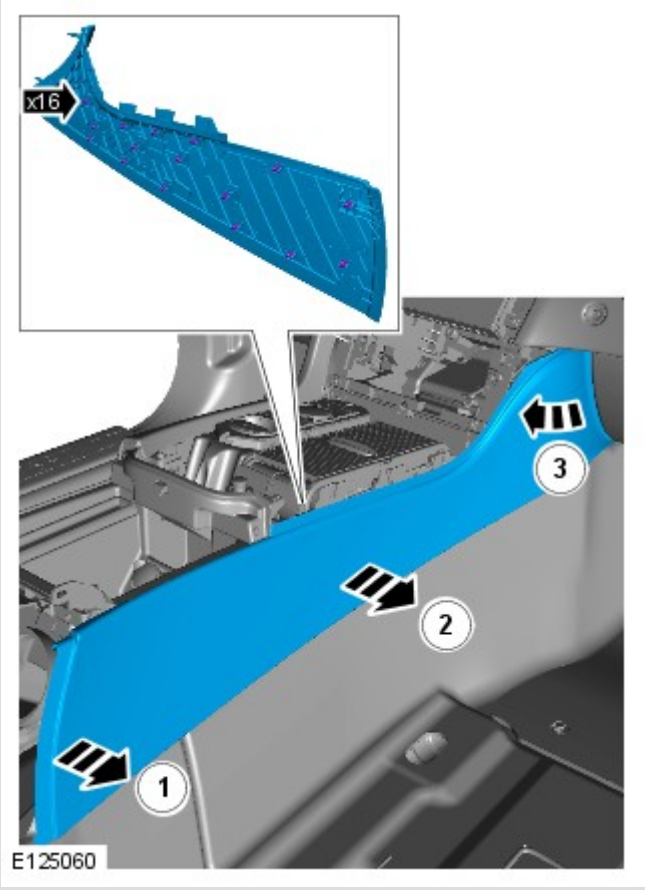

1.

To install reverse the removal procedure.