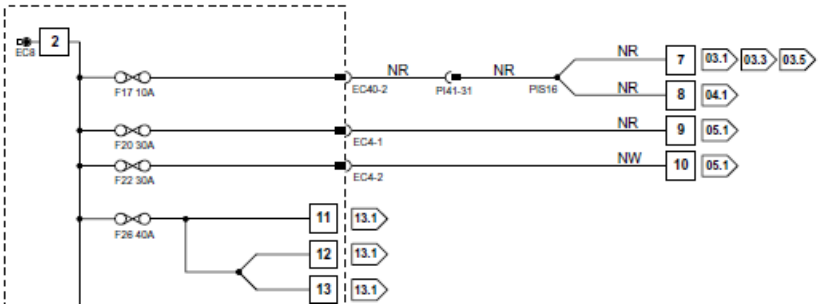
EC8
2
F17 10A
F20 30A
F22 30A
F26 40A
EC40-2
EC4-1
EC4-2
PI41-31
PIS16
NR
NR
NR
NR
NR
NW
7
8
9
10
11
12
13
03.1
03.3
03.5
04.1
05.1
05.1
13.1
13.1
13.1

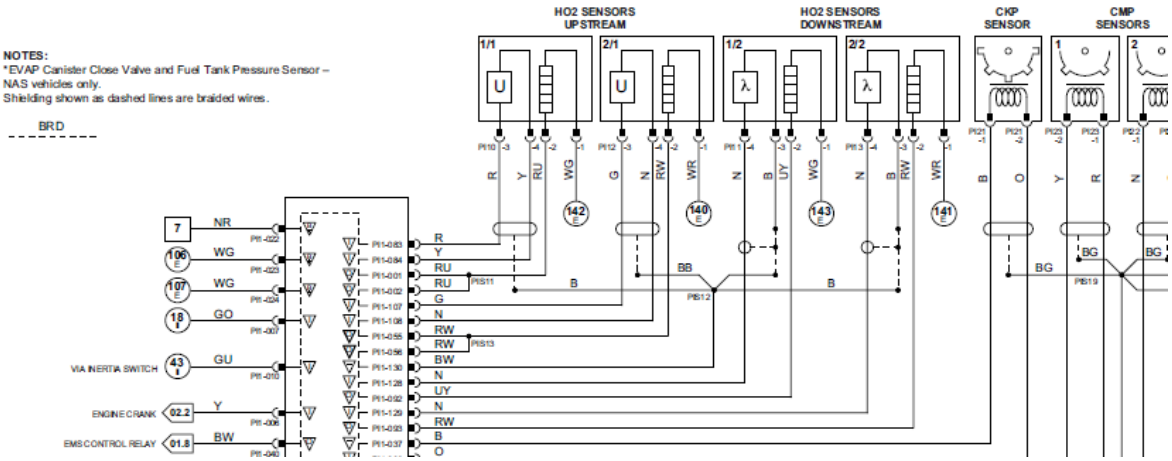
NOTES:
*EVAP Canister Close Valve and Fuel Tank Pressure Sensor – NAS vehicles only.
Shielding shown as dashed lines are braided wires.
BRD
HO2 SENSORS UPSTREAM
HO2 SENSORS DOWNSTREAM
CKP SENSOR
CMP SENSORS
1/1
2/1
1/2
2/2
142
140
143
141
VIA INERTIA SWITCH
ENGINE CRANK
EMS CONTROL RELAY
PIS11
PIS12
PIS13
PIS19

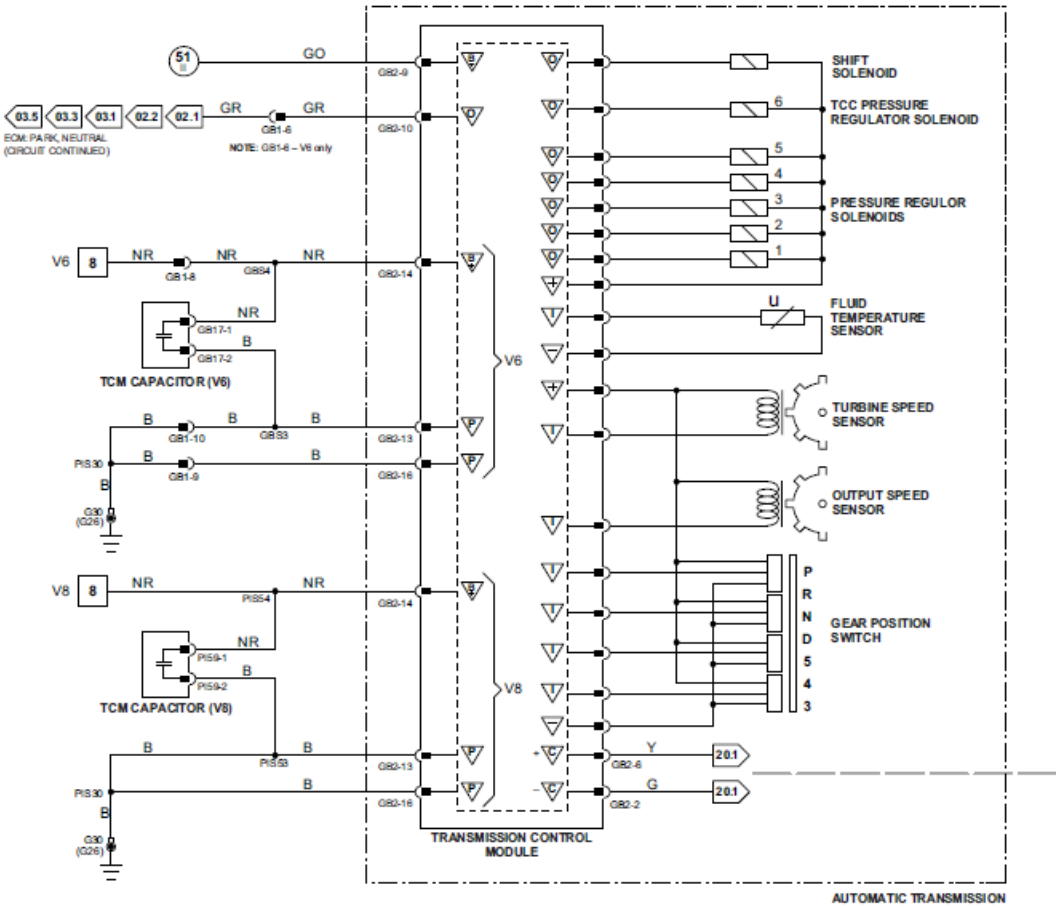
51
GO
GR2-9
03.5
03.3
03.1
02.2
02.1
GR
GR
GB1-6
GR2-10
ECM: PARK, NEUTRAL
(CIRCUIT CONTINUED)
NOTE: GB1-6 – V8 only
SHIFT SOLENOID
6
TCC PRESSURE REGULATOR SOLENOID
5
4
3
2
1
PRESSURE REGULOR SOLENOIDS
V6
8
NR
NR
NR
GB1-8
GBS4
GR2-14
NR
GB17-1
B
GB17-2
TCM CAPACITOR (V6)
U
FLUID TEMPERATURE SENSOR
V6
B
B
B
GB1-10
GBS3
GR2-13
TURBINE SPEED SENSOR
PIS30
B
B
GB1-9
GR2-16
B
G30
(G26)
OUTPUT SPEED SENSOR
V8
8
NR
NR
PIS54
GR2-14
NR
PIS9-1
B
PIS9-2
TCM CAPACITOR (V8)
P
R
N
D
5
4
3
GEAR POSITION SWITCH
V8
B
B
PIS53
GR2-13
Y
GR2-6
20.1
PIS30
B
B
GR2-16
G
GR2-2
20.1
G30
(G26)
TRANSMISSION CONTROL MODULE
AUTOMATIC TRANSMISSION