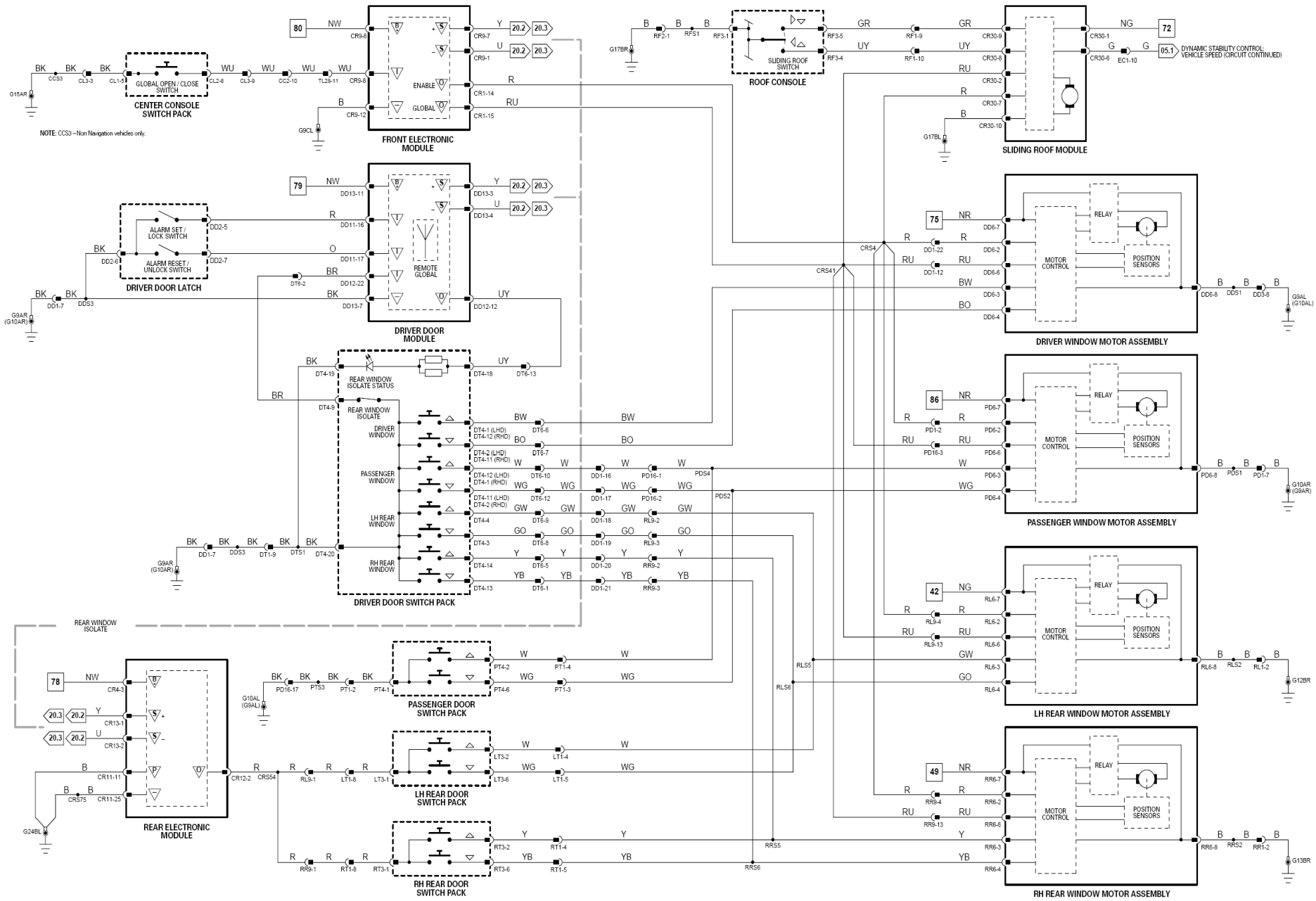
CENTER CONSOLE SWITCH PACK
GLOBAL OPEN / CLOSE SWITCH
NOTE: CCS3 – Non Navigation vehicles only.
FRONT ELECTRONIC MODULE
ENABLE
GLOBAL
ROOF CONSOLE
SLIDING ROOF SWITCH
SLIDING ROOF MODULE
DYNAMIC STABILITY CONTROL: VEHICLE SPEED (CIRCUIT CONTINUED)
DRIVER DOOR LATCH
ALARM SET / LOCK SWITCH
ALARM RESET / UNLOCK SWITCH
DRIVER DOOR MODULE
REMOTE GLOBAL
REAR WINDOW ISOLATE STATUS
REAR WINDOW ISOLATE
DRIVER WINDOW
PASSENGER WINDOW
LH REAR WINDOW
RH REAR WINDOW
DRIVER DOOR SWITCH PACK
REAR WINDOW ISOLATE
REAR ELECTRONIC MODULE
PASSENGER DOOR SWITCH PACK
LH REAR DOOR SWITCH PACK
RH REAR DOOR SWITCH PACK
RELAY
MOTOR CONTROL
POSITION SENSORS
DRIVER WINDOW MOTOR ASSEMBLY
PASSENGER WINDOW MOTOR ASSEMBLY
LH REAR WINDOW MOTOR ASSEMBLY
RH REAR WINDOW MOTOR ASSEMBLY