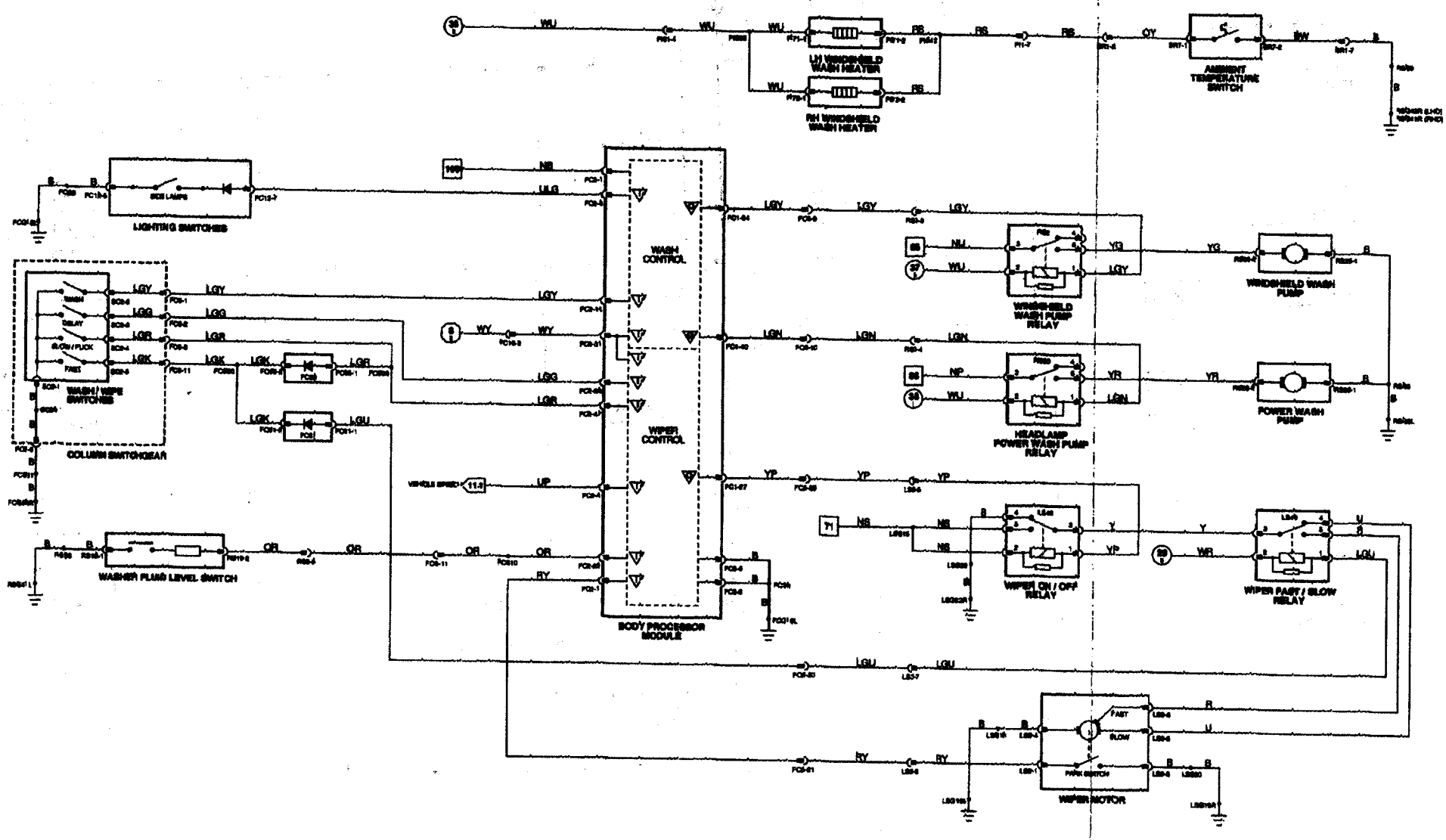

1 — 6 Fig. 01.1 | 7 — 66 Fig. 01.2 | 67 — 109 Fig. 01.3 | Fig. 01.A | Fig. 02.1 | Fig. 02.2 | Input | Output | Serial and Encoded Communications | Signal Ground (SG)

VARIANT: All Vehicles
VIN RANGE: 746013 —>
DATE OF ISSUE: NOVEMBER 1995