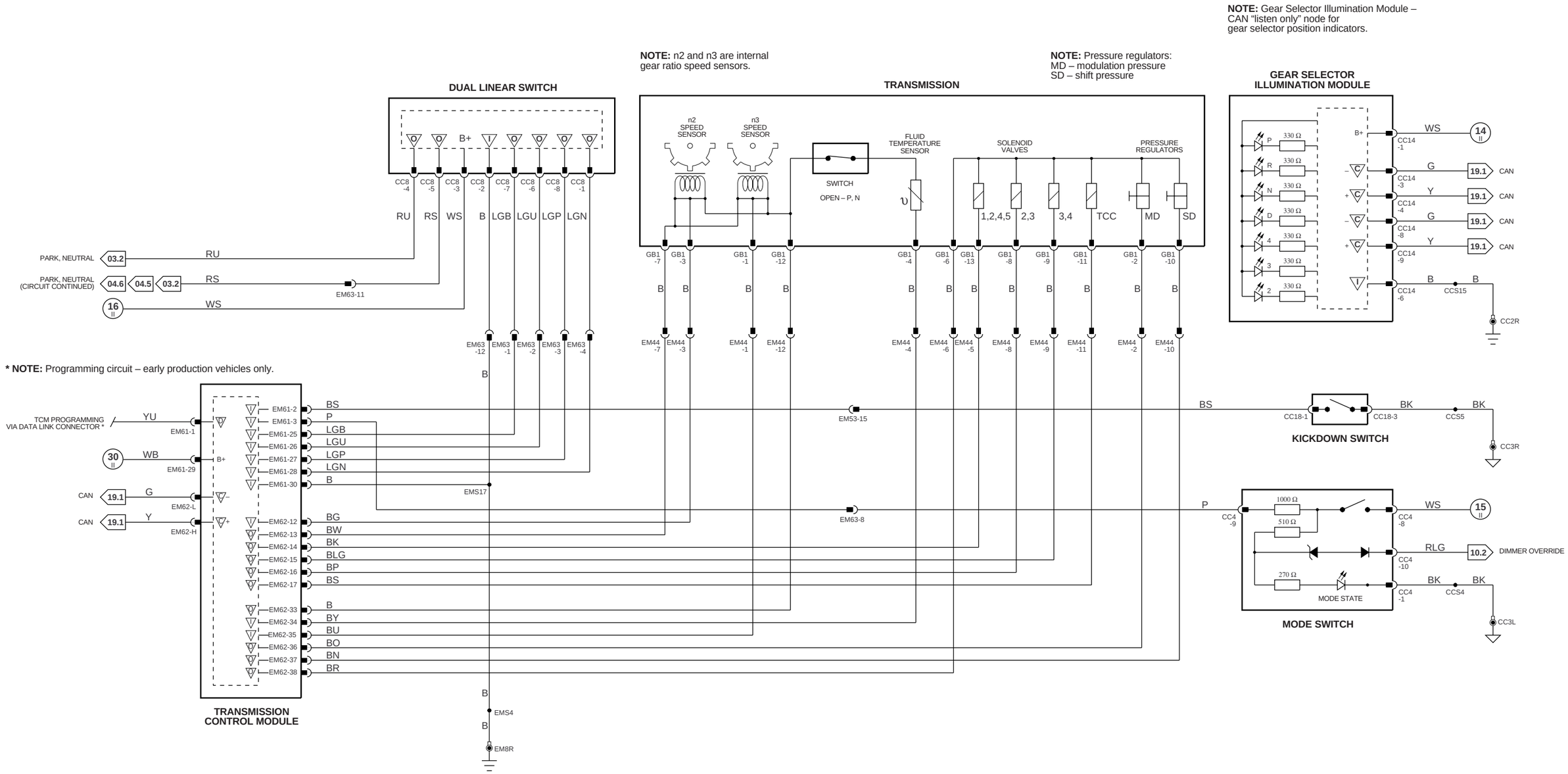

1 – 6 / 1 – 4 Fig. 01.1	7 – 47 Fig. 01.2	5 – 44 Fig. 01.4	1 – 17 Fig. 02.1	Input	Output
	48 – 82 Fig. 01.3	45 – 63 Fig. 01.5		Signal Ground (SG)	CAN (Network)

Serial and Encoded Communications
SCP Network

VARIANT: AJ26 SC Vehicles
VIN RANGE: All
DATE OF ISSUE: SEPTEMBER 1997