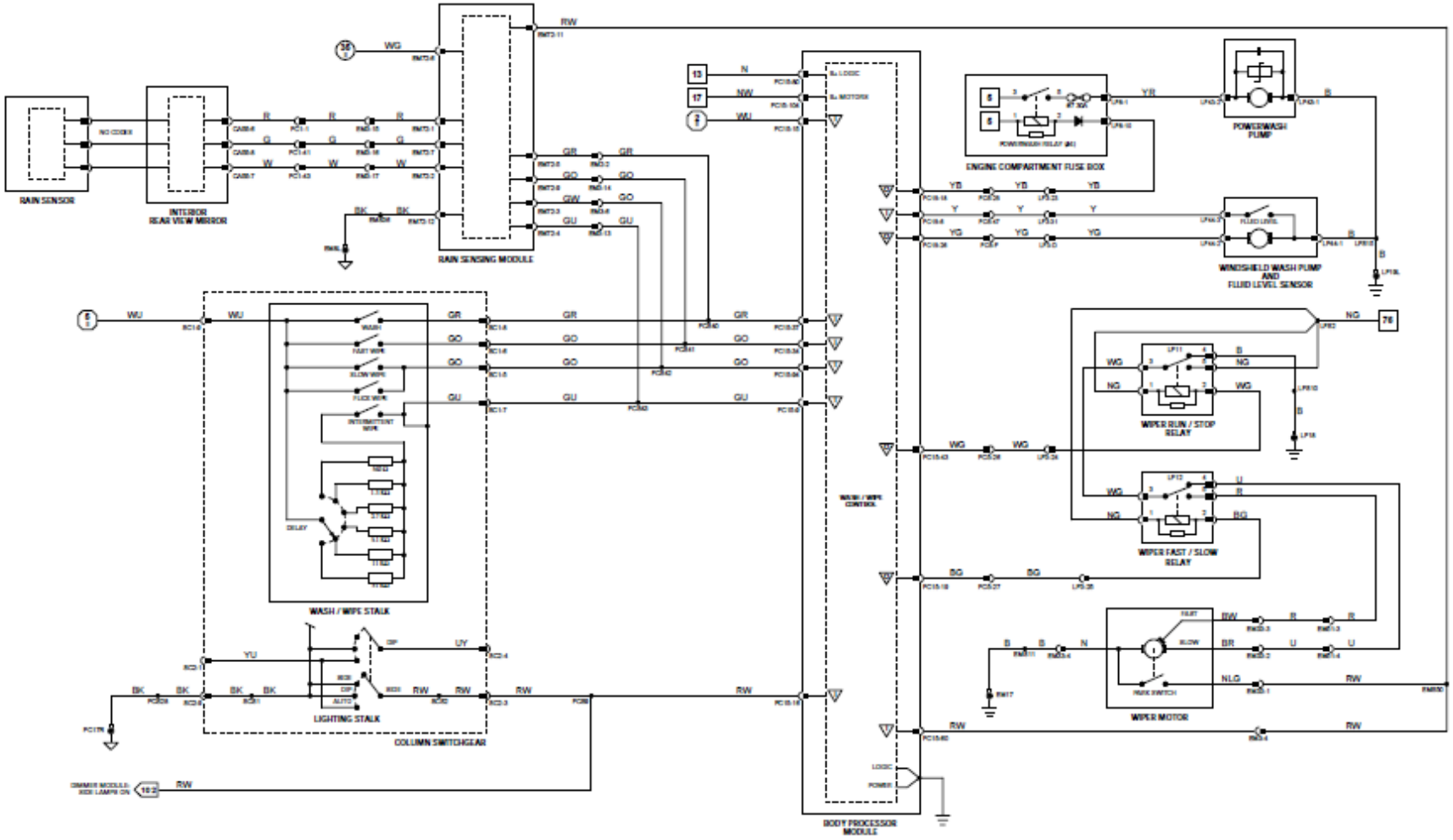

1 – 6 Fig. 01.1; 1 – 6 Fig. 01.1; 7 – 48 Fig. 01.2; 50 – 55 Fig. 01.3; 5 – 49 Fig. 01.4; 50 – 53 Fig. 01.5; 1 – 19 Fig. 02.1	Input Output	Sensor Supply V Sensor Ground	ACP CAN	SCP Serial and Encoded Data

VARIANT: All Vehicles
VIN RANGE: F20645 →
DATE OF ISSUE: September 2000