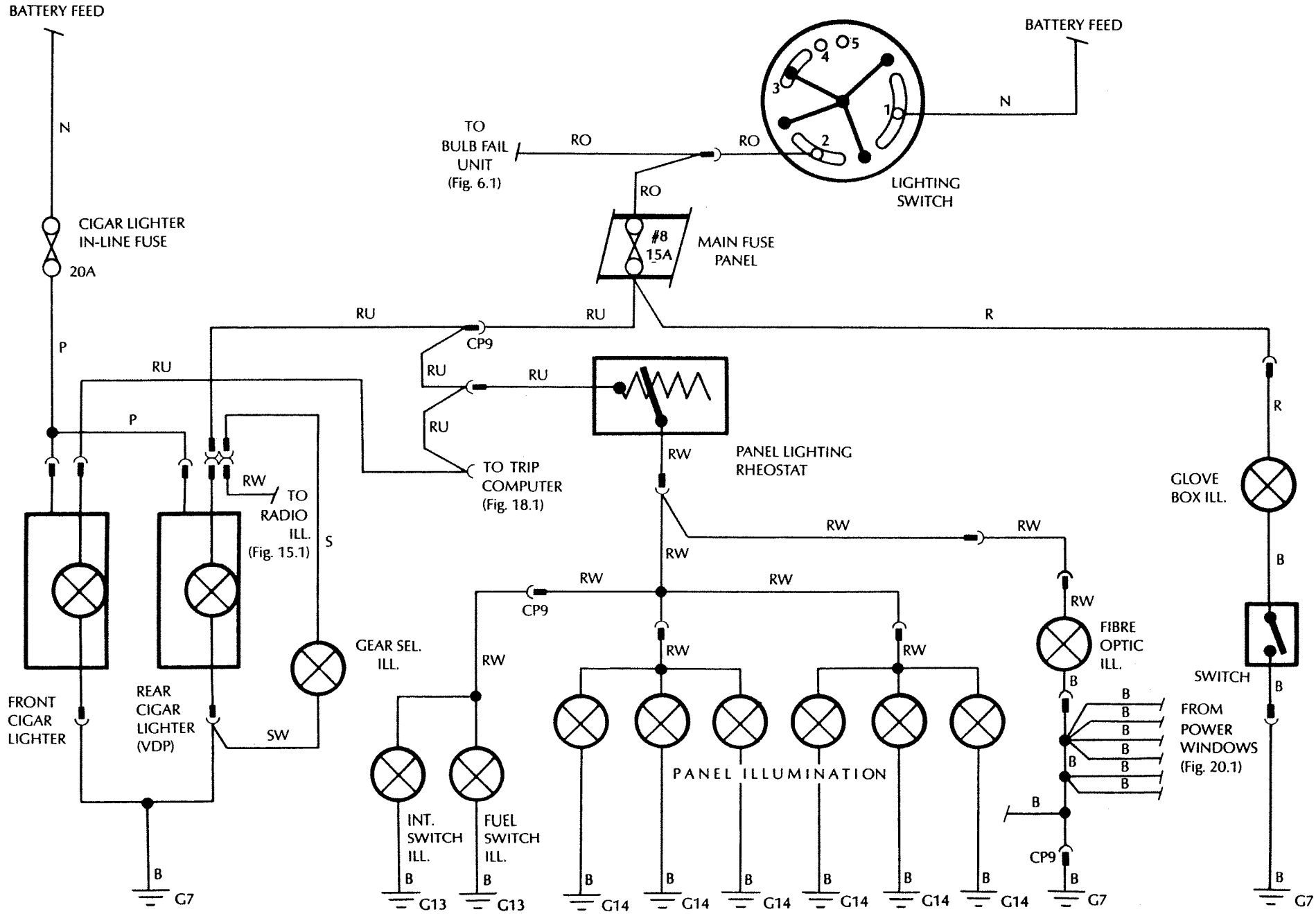FIG. 11.1 PANEL LIGHTING / CIGAR LIGHTER(S) (XJ6 III 4.2)