ph7ke83-70120-a-ab

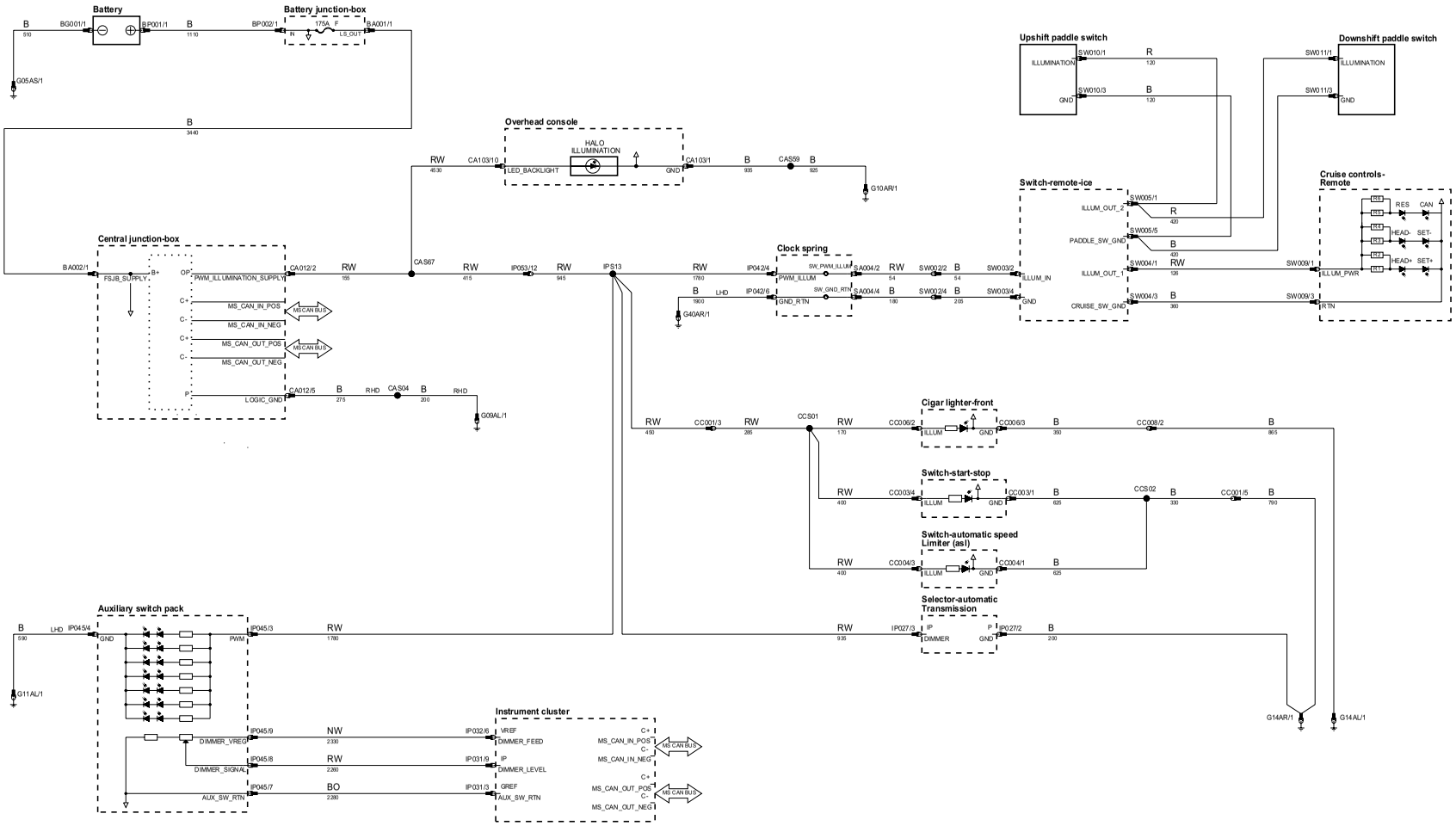

B+ Battery Voltage	IP Input	VREF Sensor/Signal Supply V	HS CAN BUS High speed controller area network bus	MOST BUS Media oriented systems transport bus	VARIANT: All
P Power Ground	OP Output	GREF Sensor/Signal Ground	MS CAN BUS Medium speed controller area network bus	D Serial and Encoded Data	VIN RANGE: All
					DATE OF ISSUE: September 2006