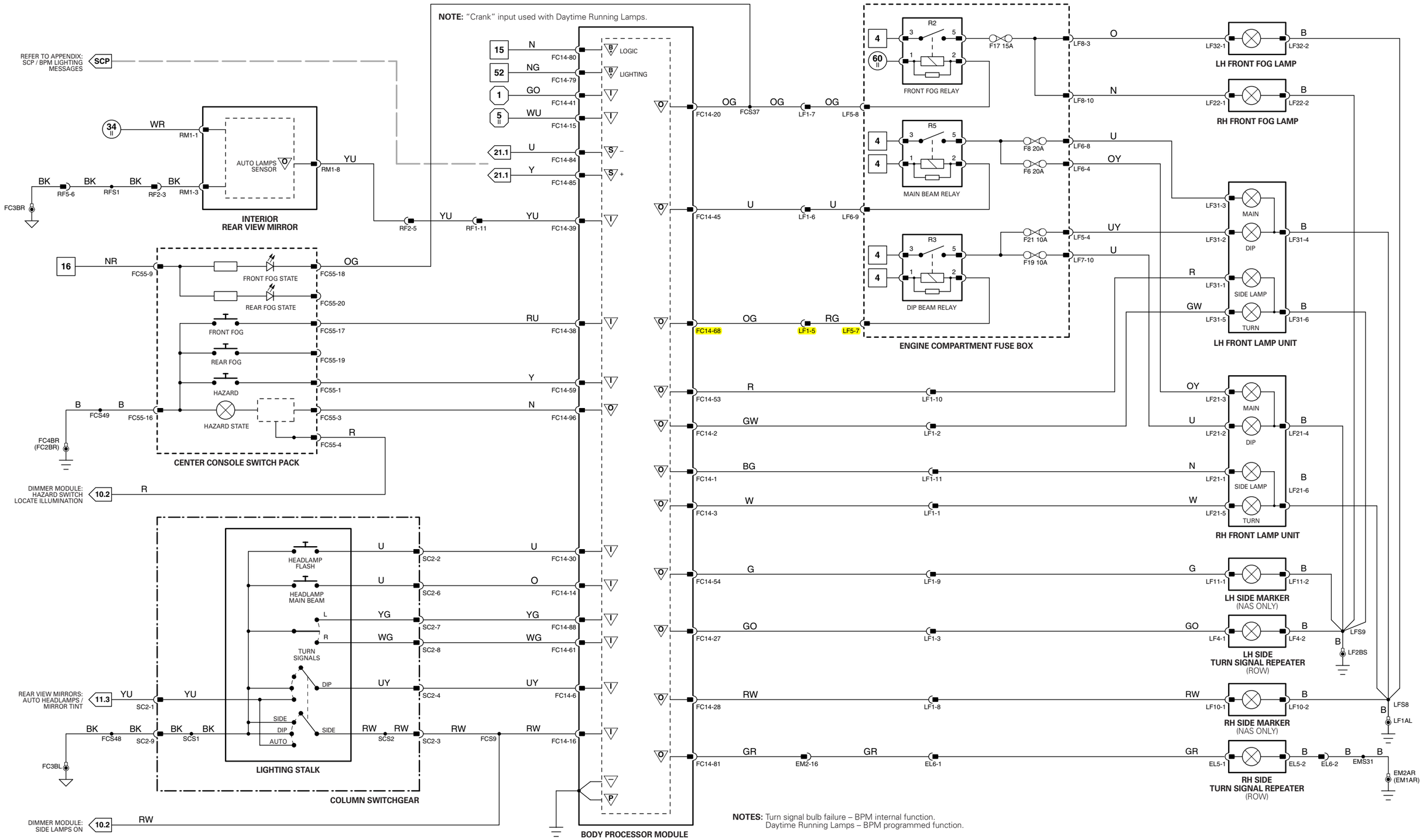

1 → 8 Fig. 01.1	9 → 52 Fig. 01.2	6 → 18 Fig. 01.4	61 → 93 Fig. 01.6	I Input	B Battery Voltage	+ Sensor/Signal Supply V	A ACP	S SCP	VARIANT: Non HID Headlamp Vehicles
1 → 5 Fig. 01.1	53 → 87 Fig. 01.3	19 → 60 Fig. 01.5	1 → 17 Fig. 02.1	O Output	P Power Ground	− Sensor/Signal Ground	C CAN	D Serial and Encoded Data	VIN RANGE: All
									DATE OF ISSUE: December 2002