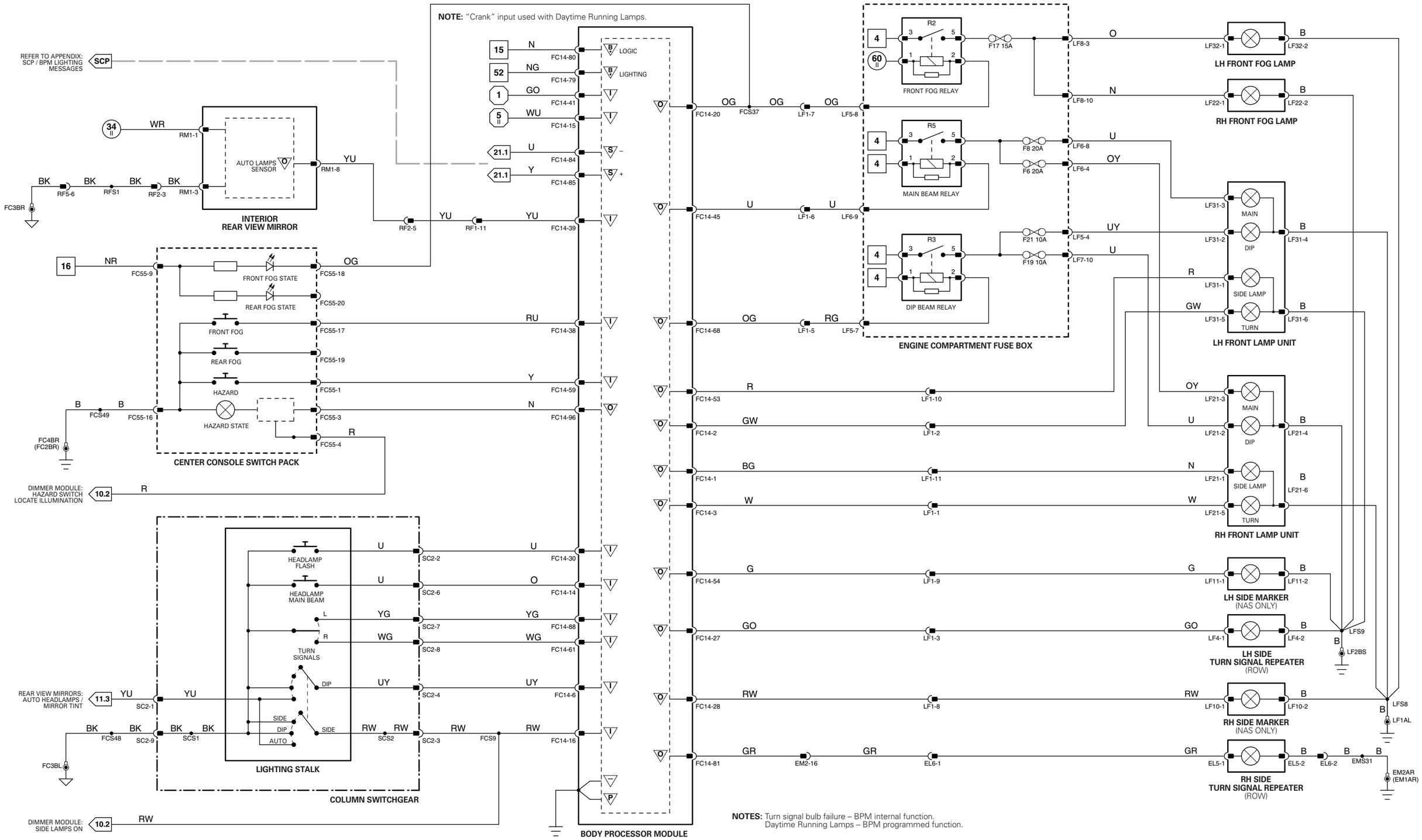

NOTES: Turn signal bulb failure – BPM internal function.
Daytime Running Lamps – BPM programmed function.

1 → 8 Fig. 01.1	9 → 52 Fig. 01.2	6 (I) → 18 (I) Fig. 01.4	61 (E) → 93 (E) Fig. 01.6	I Input	B Battery Voltage	+ Sensor/Signal Supply V	A ACP	S SCP	VARIANT:	Non HID Headlamp Vehicles
1 (II) → 5 (E) Fig. 01.1	53 → 87 Fig. 01.3	19 (II) → 60 (II) Fig. 01.5	1 → 17 (I) Fig. 02.1	O Output	P Power Ground	– Sensor/Signal Ground	C CAN	D Serial and Encoded Data	VIN RANGE:	All
									DATE OF ISSUE:	December 2002