REVISIONS				
DATE	REV.	DESCRIPTION	DRAWN	APPROVED

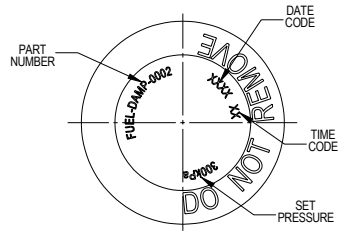

NOTES:
1. DAMPER SHALL NOT BE REMOVED FOR REUSE AFTER INITIAL INSTALLATION. DO NOT PRY TO REMOVE. FAILURE TO FOLLOW THESE REQUIREMENTS MAY RESULT IN COMPONENT FAILURE.
2. DAMPER IS A NONSERVICEABLE ITEM.
3. TOOLING USED TO INSTALL DAMPER INTO MATING CAVITY MUST INSURE THAT DAMPER IS ALIGNED CONCENTRIC TO MATING CAVITY.
4. O-RING TO BE LUBRICATED WITH A NONSILICONE BASED LUBRICANT. A FORCE LIMITING DEVICE SHOULD BE USED TO INSURE PROPER INSTALLATION.

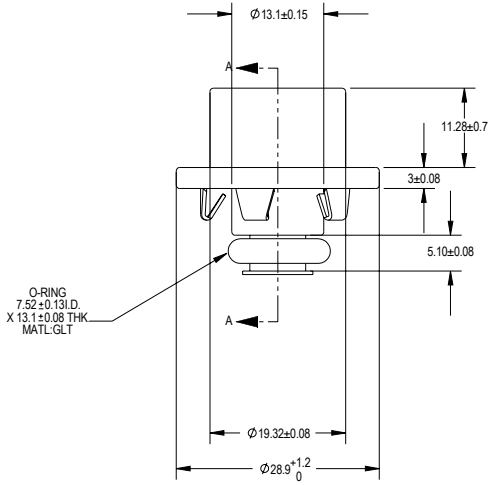

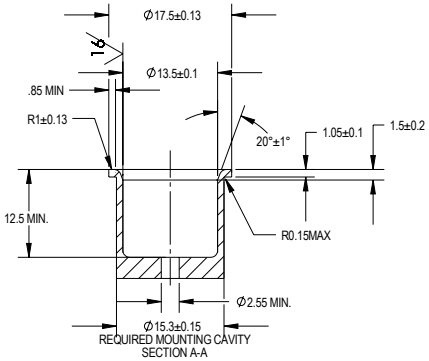

UNLESS OTHERWISE SPECIFIED:
DIMENSIONS ARE IN INCHES
TOLERANCES:
FRACTIONAL ±.06
ANGULAR: MACH ±5°
BEND ±5°
TWO PLACE DECIMAL ±.02
THREE PLACE DECIMAL ±.005

	DATE	NAME
DRAWN	4-18-02	DAK
CHECKED	4-18-02	DAK
ENG APPR.	4-18-02	JMK

SUPPLIER/CUSTOMER

INTERPRET GEOMETRIC TOLERANCING PER:

MATERIAL ---

FINISH ---

REFERENCE

SPECIFICATION

PROPRIETARY AND CONFIDENTIAL
THE INFORMATION CONTAINED IN THIS DRAWING IS THE SOLE PROPERTY OF MOTOTRON. ANY REPRODUCTION IN PART OR AS A WHOLE WITHOUT THE WRITTEN PERMISSION OF MOTOTRON IS PROHIBITED.

MotoTron Advanced Powertrain & Vehicle Systems

TITLE:
FUEL DAMPER - 300KpA

ASSEMBLY

SIZE	DWG. NO.	REV
B	FUEL-DAMP-002	

SCALE: 2:1 DO NOT SCALE DRAWING | WEIGHT: | SHEET 1 OF 1