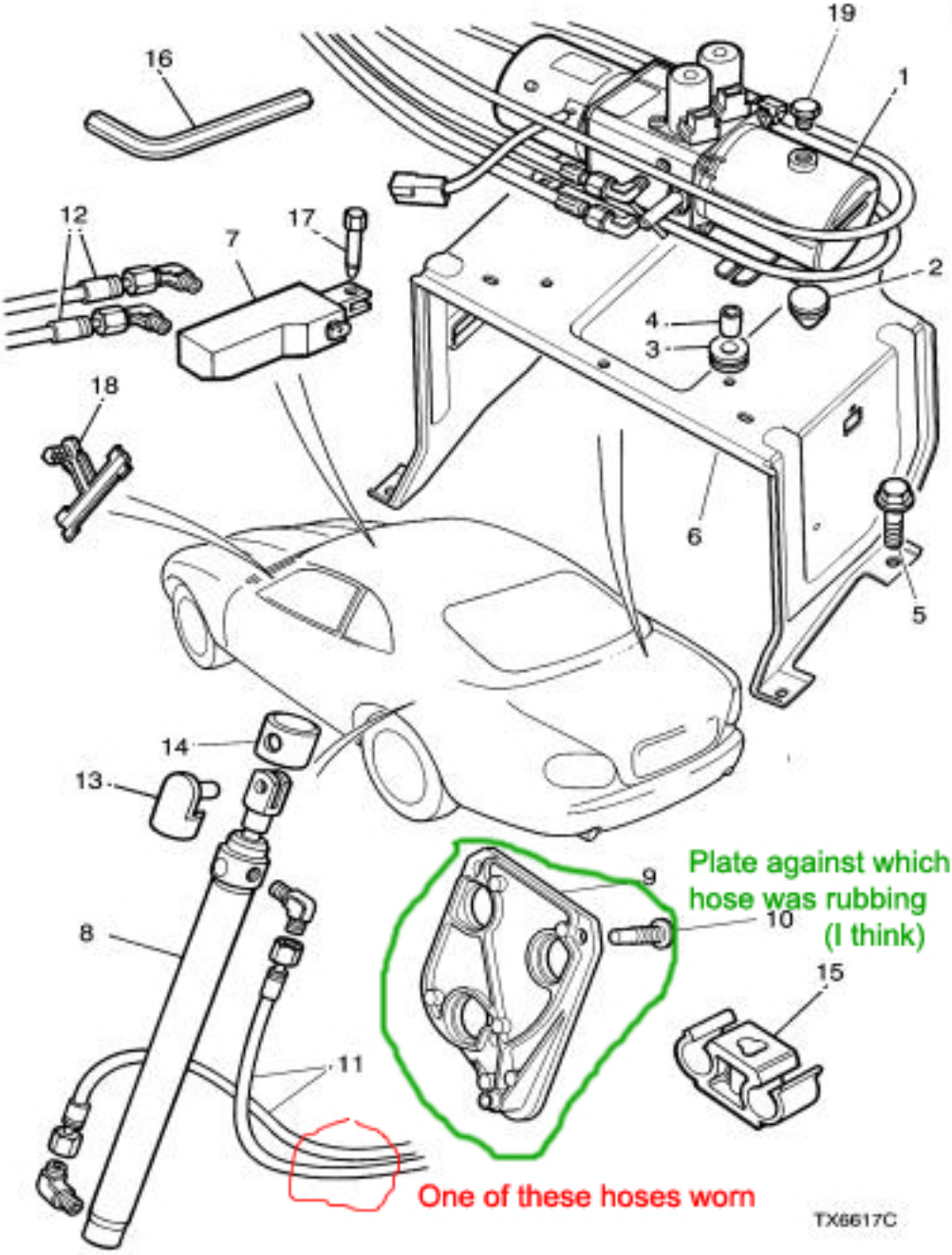
19
1
16
12
17
7
2
4
3
18
6
5
14
13
Plate against which
hose was rubbing
(I think)
9
10
8
15
11
One of these hoses worn
TX6617C