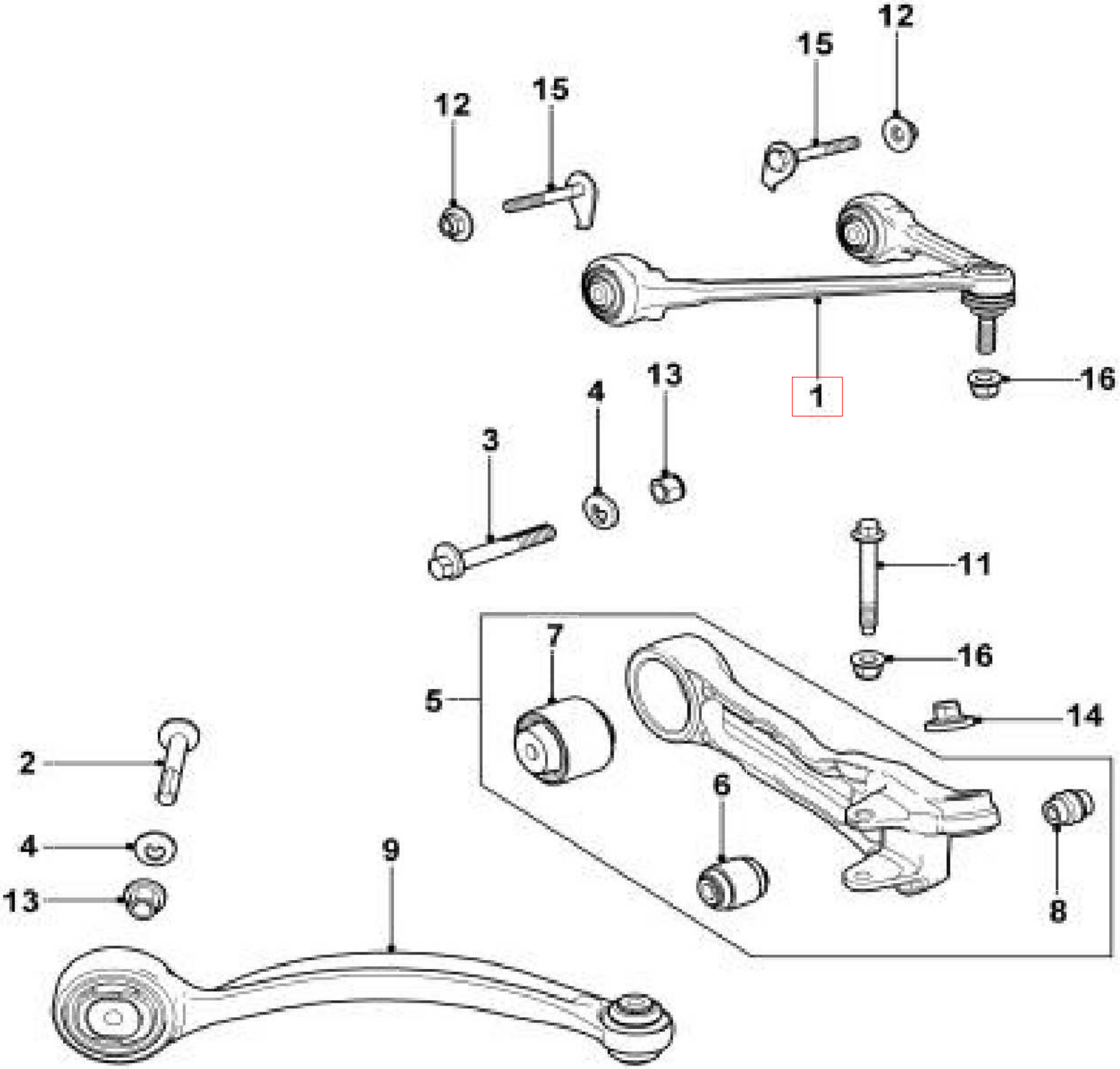

PH10761A